Everyone LOVES A PARADE!

The Authoritative Guide on How to Plan, Start, & Improve Your Local Parade!

How to …

- ★ Build A Float
- ★ Buy Materials
- ★ Plan Your First Parade
- ★ Get & Keep Volunteers
- ★ Get Sponsors
- ★ Improve Your Parade

…and much, much more!

By VICTORY CORPS
Formerly Vaughn Display & Flag

Preface

My most vivid memory of a parade experience was the first time I participated in the New York MACY'S Thanksgiving Day Parade as "Alice" in a contingent of wonderland characters. I danced with the Mad Hatter and shook what seemed like a million little hands that morning. In my mind, it took only minutes to complete the two-mile parade route and I was ready to start all over again.

The positive energy and warmth exchanged that morning affected the course of my life. I was hooked.

Each of us in the festivals and parade business have, at the root level, a need to positively impact the quality of life in our communities. Whether as a focus of community pride at the opening of a new town hall, a celebration of local harvests, a recognition of a hometown hero, sharing ethnic heritage or a seasonal parade heralding the arrival of Halloween or Santa Claus, parades bring people together. And the spectators are as much a part of the program as are the participants.

At the Tournament of Roses Parade people camp out along the parade route to ensure good viewing locations. In New Orleans, paraders toss trinkets to people along the line of the event. At the Traverse City, Michigan, Cherry Festival, parents watch and encourage their children who participate in the Cherry Festival's Children's Parade. And at Firemen's Convention Parades communities come out in support of their own Fire Departments and to recognize and welcome fire fighters from neighboring towns.

The size of the budget does not determine the success of the event. Volunteer-driven events that encourage the creative participation of schools, churches, community groups as well as businesses can accomplish a high level of success.

While big budget, televised events with large floats and well-known talent may not fit into all event plans, they do represent one thing that is important to remember, no matter what the budget, a quality event should always be the goal.

How To Use This Book

This book has been assembled to give you the benefits of years of parading experience. Each contributor shares practical information and suggestions on what challenges might arise and how to deal with them.

Simple questions:

- ★ What assistance is available for float building?
- ★ What permits are necessary?
- ★ How much insurance will be required?
- ★ Should every participant sign a release?
- ★ Where do the portable toilets belong?

Can lead to more complex questions:

- ★ How many agencies are involved in issuing water-related permits?

- How communicate between the parade, water show, and a military fly-over?
- To judge or not to judge? etcetera.

The subject of Parades is vast and this eBook does not claim to be complete. It can help you determine what questions to ask and how to go about finding the answers. Please remember also that an eBook is a "work in progress" and it will be updated frequently to improve it.

We hope you'll check back frequently!

Valerie Lagauskas
Founder/President
Synergistic Concepts, Inc.
IFEA Foundation Board Member
New York City, New York

Dedication

This eBook is dedicated to the thousands that help make the world a more festive place by organizing local parade events. They spend tireless hours, often unpaid. In doing so, however, they provide fun for all, bring individuals together, and unite our communities. They enrich our lives and we thank them for it!

Acknowledgments

This eBook has been developed with the input, suggestions, and ideas of many. New ideas will contribute to its future growth and, in the interim, we hope it will help those interested in building great floats, starting a new parade, or improving an existing one.

While we cannot adequately express our gratitude to all who helped us in the development of this eBook, it would not have come to fruition without the contributions of LeRoy Akins, Sylvia Allen, Alexander E. Berlonghi, Toni Bodenhamer, Kelley Bimson & John Ickes, Douglas Green, Marvin S. Kaplan, Valerie Lagauskas, Don MacTavish, Annie Morgan, Ray Pulver, Steve Schmader, Bruce Skinner, and Mark Tucker.

Toni Flaherty edited the eBook. Her contributions made it a comprehensive and cohesive resource for parade enthusiasts.

Your input has been invaluable!

Table of Contents

Preface 1
How To Use This Book 1
Simple questions: 1
Can lead to more complex questions: 1
Dedication 2
Acknowledgments 2
Table of Contents 3
Introduction 4
PART I -- For the Float Builder 5
How to Build a Parade Float 5
Making a Beginning 5
Try for Novelty 5
Putting on the Finish 6
The Animated Float 7
What Colors? 7
Basic Steps of Parade Float Construction 8
Examples of Parade Float Kits 36
PART II – 38
For the Parade Organizer 38
Staging a Parade 38
The Team 38
Time and Size Limitations 39
The All-Important Route 40
The Parade Arrangement 41
The Headquarters Division 42
Have A Schedule 42
Marshaling Procedure 43
Parade Rules and Guidelines 44
Entry Selection: 45
Types of Entries Considered For the Parade 45
Pick Your Entries Carefully 47
12 Steps to Sponsorship Success 50
Volunteers 54
How & Where to Get Marching Bands 58
Event Insurance 62
How to Create Valuable Partnerships 66
Coordinate with the 4-H Organization in your Area 66
How to Use the Internet 67
Free 3-Month Web Site Trial for Your Parade 67
Reduce Phone Calls With Your Online Message Board! 67
Some Great Examples of What Others are Doing! 68
Special Products & Services 69
Inflate your Parade with Dynamic Inflatables 69
Coloring Books & Crayons for the Kiddies 70
One Picture is Worth 1,000 Words 71
Cleanup Before your Parade 72
Part III – Finding & Listing Parades & Festivals Near You 75
Part IV –..... 76
How To Improve Your Parade 76
Let Your State Tourism Department 'Reign' On Your Parade! 76
State & Local Tourism Dept. List 77
Improving Your Parade's Profitability 107
Getting the Big Sponsors 109
Taking Inventory: 109
Proposal Writing/Proposal Assessing 110
Inflate Your Event With Inflatables 114
Choosing a Balloon Provider 114
How to Attract the Babyboomers to Your Parade 117
1. Bank Senior Clubs 117
2. GLAMER – 117
Group Leaders of America 117
3. Tour Bus Groups 117
4. Official Internet Events Directory 118
PART V -- ADDENDUM 119
Top 10 Reasons Why Parade Floats Work 119
Your Parade Improvement Tool Kit 119
Helpful Forms 120
Important Rules and Guidelines 120
Guaranteed Sponsors for Any Parade 122
Sponsorship Fact Sheet Format 123
Marching Bands at a Glance 124
Recycling Steps for Your Parade 126
Associations & Organizations 127
Newsletters & Publications 133
Parade Consultants & Consulting Firms 135

Introduction

Over 1,000 years ago, the first Carnival – held to celebrate Fat Tuesday (Mardi Gras) – was staged in Nice, France.

As part of that event there were parades. And although parades are centuries old, many owe their origins to the ones held in Nice.

For it was the event that was the inspiration for Mardi Gras in New Orleans, Carnival in Rio, and hundreds of other carnival parades throughout the world.

In 1889, someone from Pasadena, California went to the Battle of Flowers Parade at Carnival in Nice, and came back to his community to proclaim that Pasadena should have an all floral parade, too. Thus was born the Tournament of Roses Parade, which millions watch live and on television every New Year's morning.

There are now over 50,000 parades of all types in the U.S. alone. They are staged for many reasons – as celebration of community, for political, social and cultural reasons, or just for the simple reason for people in a community to get together and have fun.

The Tournament of Roses Parade is the third highest network rated show behind the Super Bowl and the Academy Awards.

But most parades aren't seen by millions. Some are seen by only hundreds, but still are are worthy celebrations in communities of all sizes around the world.

As parade organizers, it is up to us to see that these events are staged professionally and exhibit creativity, innovation and proper planning. It is up to us to take our parades to the next level, so that spectators can continue to enjoy.

We can do this by attending other events, or by attending educational seminars, such as the ones produced by our organization, the International Festivals and Events Association. Each year we produce a special seminar on parades, which is held in conjunction with an outstanding parade event. Those parades have included the Tournament of Roses, Macy*s, Mardi Gras, Carnival in Nice, and the San Francisco Chinese New Year's Parade.

We also present several programs on how to produce parades at our annual international convention, where over 1200 people to gather to learn how to produce parades and other events -- and discover how to fund, create and organize them.
The idea of networking to learn is a very old one, as evidenced by the Carnival in Nice example -- many parades have copied their event, adapting to their own situations. The Carnival in Nice, the Tournament of Roses Parade and Mardi Gras are three entirely different events.

We hope that you will keep networking, and hope to see you at a future IFEA parade seminar or convention, or at another parade around the world.

Bruce Skinner
President, International Festivals and Events Association
Port Angeles, WA
June, 2000

bruce@ifea.com,
P.O. Box 2950,
Port Angeles, WA 98362
Phone: 360-452-3749
FAX-360-452-4696

For Float Supplies
Visit **http://www.victorycorps.com/floats.html**
Or Call 1-800-328-6120

PART I – For the Float Builder

How to Build a Parade Float

The noun "FLOAT" is like "parade" in that it can mean many things: A regulating device, a fishing bobber, a life preserver, a barometer gauge, a buoyant dock, a brewing vat, a plasterer's tool, a harrow, and so on. Looking down the list of definitions you will also find: "A flat-topped vehicle without sides for carrying displayed exhibits or objects in a procession; also, such a vehicle with its displayed exhibits or objects."

In the business of building floats, a float is often called a "production." The word "float" was probably first used to mean a parade car because that's what a float should seem to do— "float". And it achieves the appearance of floating through its special construction and its embellishments, including the all-important fringe, which hides the wheels and gives it the look of being suspended in the air, gliding along without support.

There are schools that offer credits to members of manual training classes for their work in building floats for the hometown parade. Many small business owners build their own float in their garage, keeping it carefully hidden until the day of glory. Some of them have become very adept at this do-it-yourself construction. Clubs have made wintertime projects of building floats. Private individuals with a flair for form and color have made a hobby of designing them. A float is a personal creation.

Making a Beginning

To begin with, you will need four wheels, attached, of course, to axles, and a framework In some cases, float builders have started with nothing but wheels and axles, sometimes only wheels and one axle. Two-wheeled floats can be found. But the four-wheeled variety is much more stable and easier to work with.

Floats may be built on trailers, trucks, cars, wagons — almost anything that can move, even boats, though the chance to build floating floats comes infrequently. Eighty per cent of all floats start with a flat platform: a truck bed or a trailer. If it's a truck, the design should blend the cab into the picture, or the cab may be removed and a special space left for the driver. A small tractor generally pulls a trailer, and that, too, is included in the decorative scheme.

Suppose you're planning to build a float, and you already have a trailer. Your next concern is a place for construction, and space of this type is at a premium. If several floats are to be built, the construction site should be a large, open building, preferably without roof-support posts. And with doors large enough for egress. An airplane hangar is the ideal location for float building. In a small town, the lumberyard building generally offers the roominess needed, as well as a good supply of basic materials.

Try for Novelty

There are a few basic designs, which are always good, with different decorative touches, but you may prefer to try for novelty. You have two elements to work with: shape and color. Too often the effect of a float is spoiled because it sticks too closely to the

practical outlines of the vehicle on which it was built. The idea is to mask the underpinnings completely by varying the overall shape, by working curves and swirls into the ground plan, and developing an imaginative topside form . Almost every float has a climactic point: the place where the personalities ride, or the massive emblem is mounted, or an animated figure goes through its paces. The upper levels of the float are shaped to lead the eye to this point.

Once you have established your design, you fill out the ground outline with plain, light lumber, cut in whatever curves are necessary, and fastened securely with nails or bolts to the trailer bed. When your lateral shape is set, the vertical outlines, transverse,fore,-and-aft, are cut in plywood or wallboard and securely mounted. If your float is to carry live figures, platforms for them must be rigidly built and provided with unobtrusive braces for float riders to hold on to. If several riders are to populate the float, they should be placed at two or three different levels, highest at the rear and center. Any float should be symmetrical, one side the same as the other. The sidewalk-bound onlooker will get no opportunity to move around and look at any mysteries on the other side.

In all this construction, you make allowance for wheel clearance, springing, and the turning radius of the float. You should inspect the parade route to note any bumps or depressions for which allowance must be made, so your float doesn't scrape a forward or rear overhang. If the float is on a truck, see to it that no flammable material is near the hot exhaust line. You may decide to rig a special extension to carry exhaust beyond the overhang. It's advisable, and it's wise, too, to wrap the exhaust pipe to increase the safety factor.
Having come this far, you have the skeleton of a float or basic framework, undecorated, only partially shaped. Next you round out the shape, to form it into curves and hollows, or to give it that streamlined look. Perhaps part of the exposed portion of your float is solid material, woodcut to shape, or plaster. These surfaces should be painted before any of the other finishing material is added. You might sprinkle or glitter over the freshly painted surfaces to give these an eye-catching sparkle.

Putting on the Finish

Many special decorative shapes are available already molded in heavy materials exclusively for float use. To the outline, after the exposed portions are painted, attach any of a number of finishing materials—vinyl or metallic floral sheeting, in a rainbow of colors, or with designs worked in; aluminum foil paper, also in many colors, used flat or crumpled before application to increase its light-scattering properties, sparkle sheeting, or any other of various finishes which may catch your eye. Artificial flowers, or real ones, may be attached, as may stars, crescents or other appropriate decorative cutouts..

Part of your float may require mats, or vinyl and metallic twists to accentuate its lines. Your choice is wide. The materials you select are applied with special adhesives or stapling devices. And the finish itself is subject to some corrective shaping to get exactly the outline you want.

Metallic or vinyl fringe goes around the bottom of the vehicle to mask the running gear. A float is generally built with its bottom level spaced from the pavement to suit the length of the fringe. If a fifteen-inch fringe is used, the float edge is built fifteen inches from the pavement. With a one-inch overlap for fastening, this allows a one-inch clearance, just right to create the illusion of floating.

You now have a standard float which, it your estimate of limitations is correct, is ready to go into the parade.

The Animated Float

The standard float, without decorative sidecars, has some noteworthy cousins of more elaborate design. Animated floats have been built more and more cleverly each year. Fish blow bubbles, figures walk, dogs pull sleds, waterwheels turn, windmills revolve and mannequins play music.

These involve a basic departure in the building of a float; the groundwork for a powered float is at least twice that of the conventional production. The mechanized equipment must be built, installed, tested and anchored. It must stand the strain of traffic before the rest of the work goes forward. Endless belts, gear trains, eccentric mechanisms—virtually every transmission device has been used in float animation. What makes the whole idea possible is the portable power generator, and its installation involves still more wrinkles in basic float design. Provisions must be made for safely exhausting the small but efficient gas engines which run them. The design must also allow plenty of ventilation, since most of these engines are air-cooled.

The wiring that goes into some animated designs may be complex, and should be installed and tested when the float is in the frame state. There will be little opportunity to make changes after the production is decorated. In some cases, animation is powered by a driveshaft clutched and geared directly to a gas engine, eliminating wiring. Gas - electric power permits greater control. Occasionally power engines must be additionally muffled to prevent discord with the music of a following band, or just to mask the obvious.

Float design should allow for wind pressure, and internal bracing should guarantee that surfaces exposed to gusts of wind aren't damaged. Above all, with a powered float, make sure that its working parts are accessible for repair from the inside. Many a float sponsor has had his day ruined by learning that a spark plug couldn't be changed without breaking through the decorative capsule, necessitating additional repairs. Some sponsors insist that a float-builder be on hand, with materials, as a parade is about to start, to make decorative repairs quickly in case of minor accident.

What Colors?

Too many builders, particularly those with limited experience, worry about color. Few colors will clash on floats. The materials are brilliant and more likely to accent the hues of other materials than to cause discord. Pastels are used more and more in float decoration, chiefly to set off strong colors, and it is in pastels that conflict is most likely. Don't imitate Christmas and do the job up in conventional red and green, but strive for novelty. You may find your color scheme in the theme of your parade, or in the idea of your float itself.

Some nationality groups with strong influences in parade cities prefer particular groups of colors, perhaps those of their old-country flags. Some of the new metallic materials, and the neutral plastics, make color selection unnecessary. It's show and glitter you're after, and the golds and silvers have it. A patriotic parade has a general color scheme already established.

Presented By Victory Corps
Minneapolis, MN
Tel: 1-800-328-6120
Email: victorycorps@aweber.com
http://www.victorycorps.com

Basic Steps of Parade Float Construction

Basic steps of construction for a 7' X 20' parade float on a 4-wheel trailer chassis

Width between bolster stakes will vary on different makes of trailers. Build 2" X 10" base frame (stringers and spreaders) to fit between bolster stakes of trailer being used

Extend reach bar to get desired wheel-base

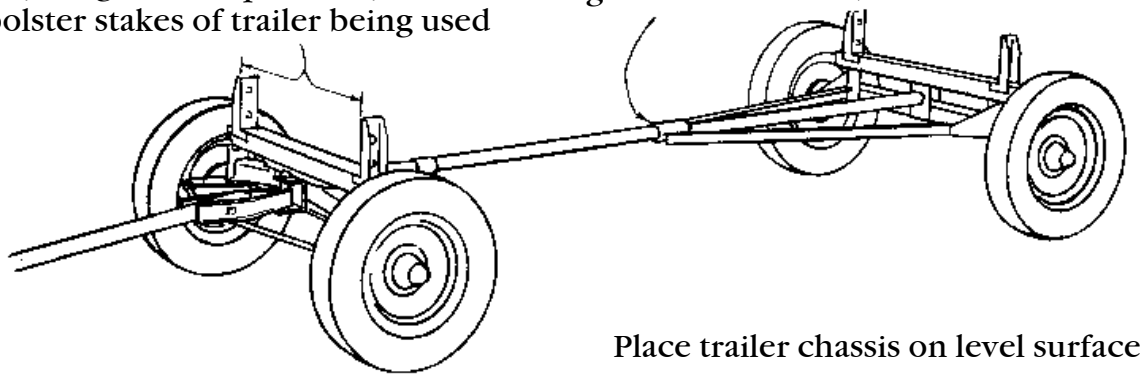

Place trailer chassis on level surface

Step 1

2" X 4" brace blocks

2" X 10" stringers

2" X 10" spreaders

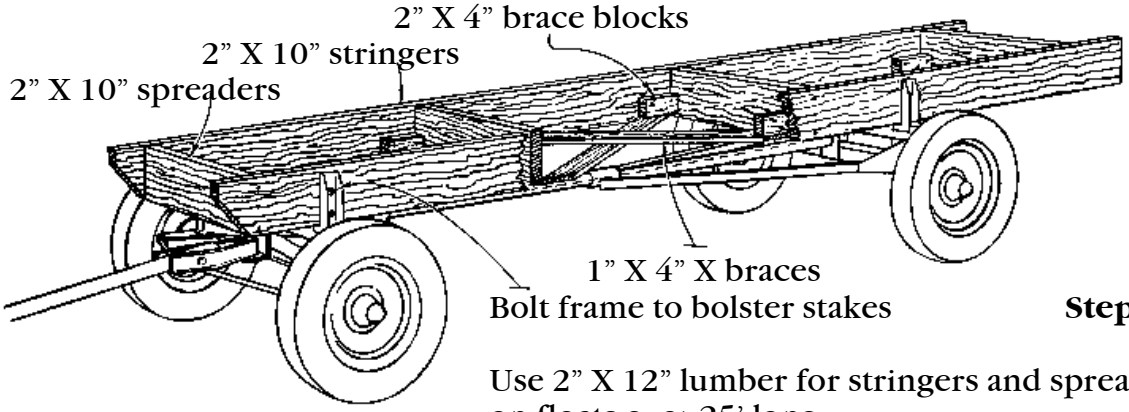

1" X 4" X braces

Bolt frame to bolster stakes

Step 2

Use 2" X 12" lumber for stringers and spreaders on floats over 25' long

Nail 2" X 4" joists to stringers

2" X 4" joists

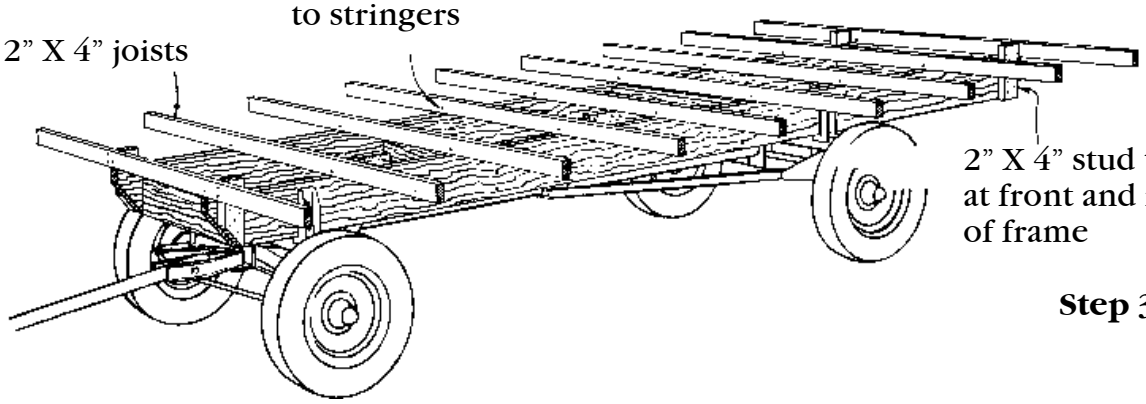

2" X 4" stud ties at front and rear of frame

Step 3

PLAN STEP 1

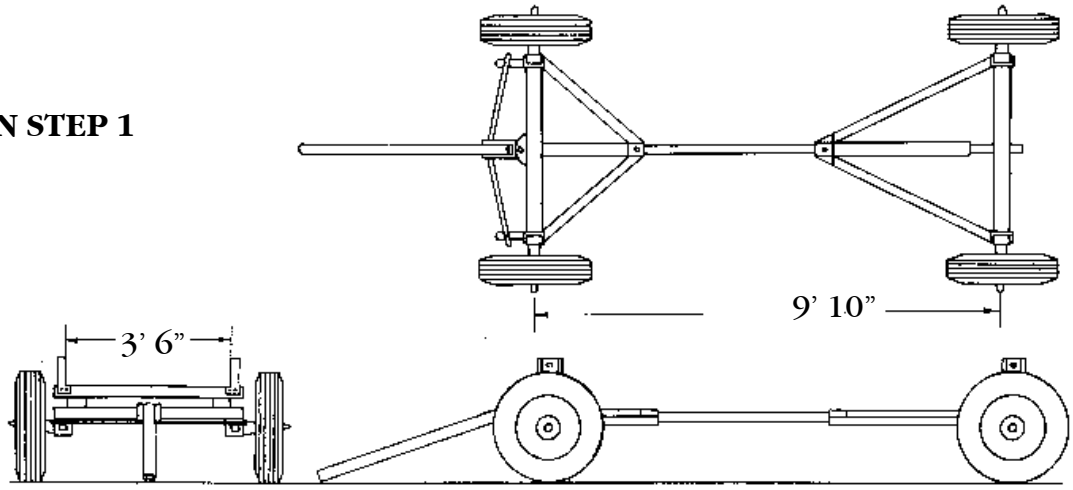

PLAN STEP 2

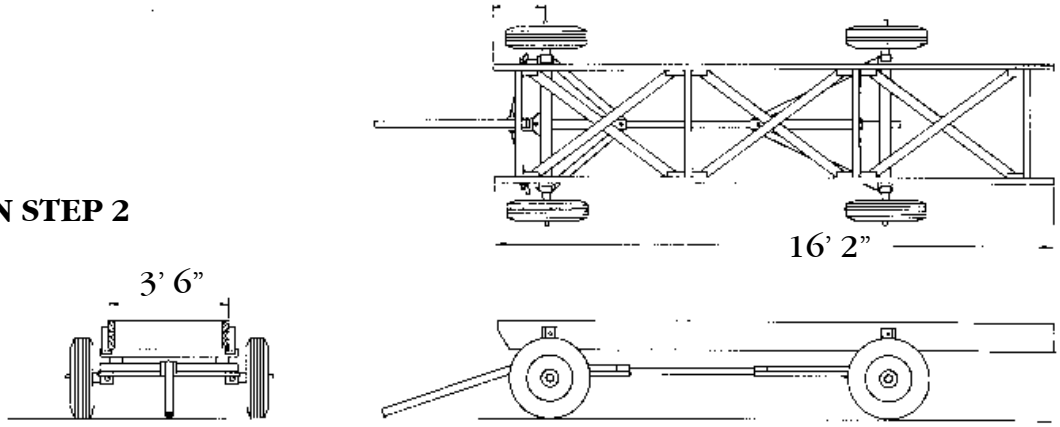

PLAN STEP 3

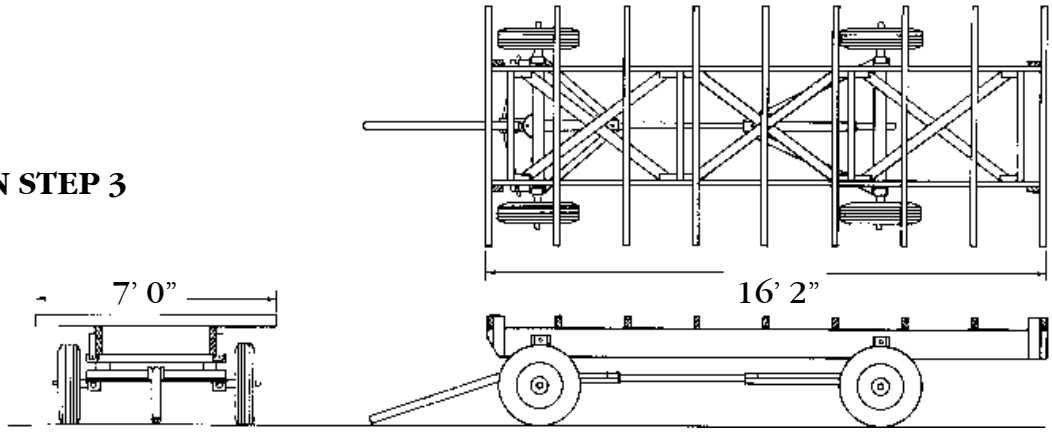

Floor in trailer platform with 1" X 6" boards
(wider boards may be used if desired)

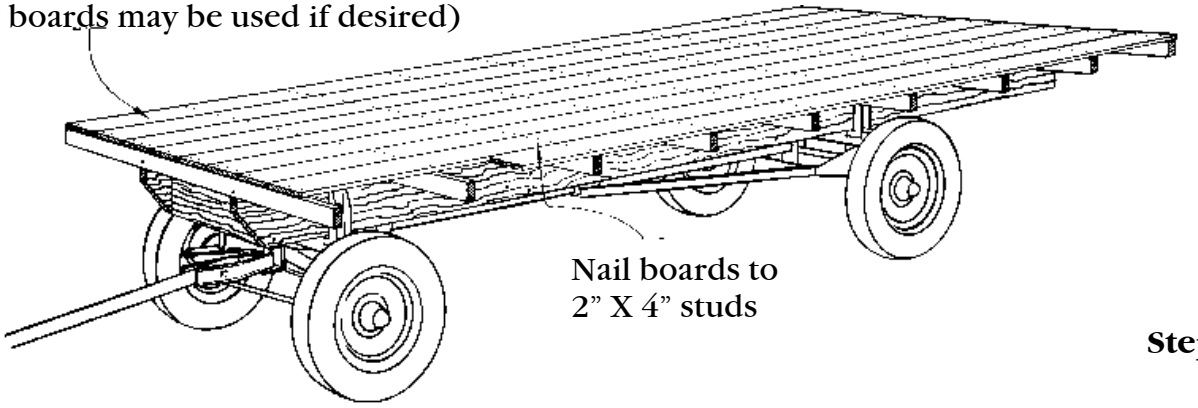

Step 4

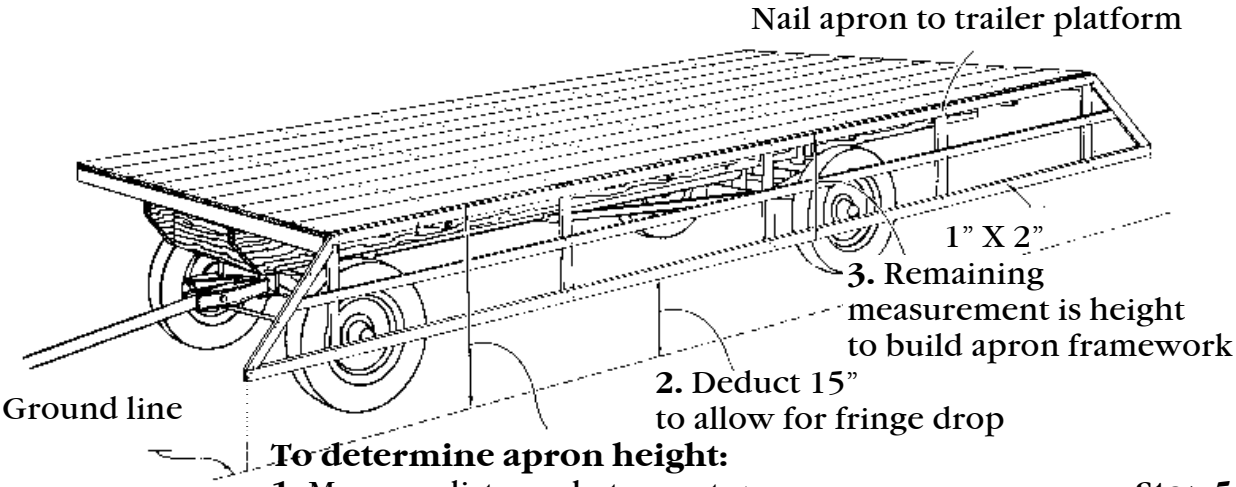

To determine apron height:
1. Measure distance between top
of trailer platform and ground

Step 5

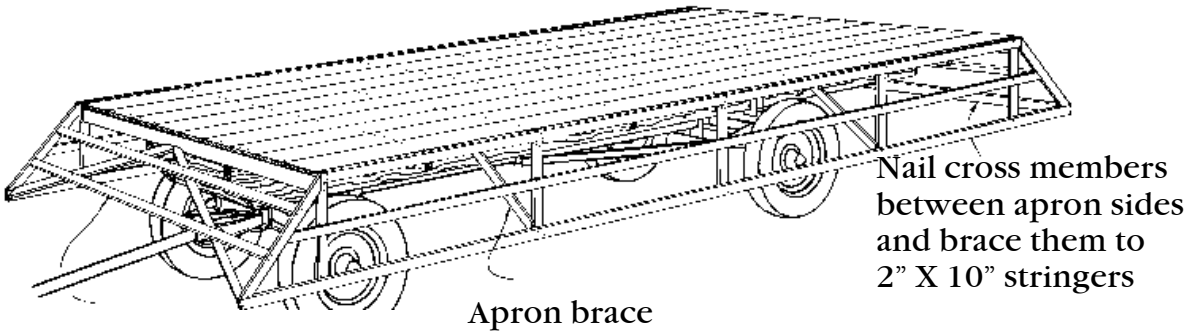

Lower cross member on apron front frame
is elevated to allow for trailer tongue clearance

Step 6

PLAN STEP 4

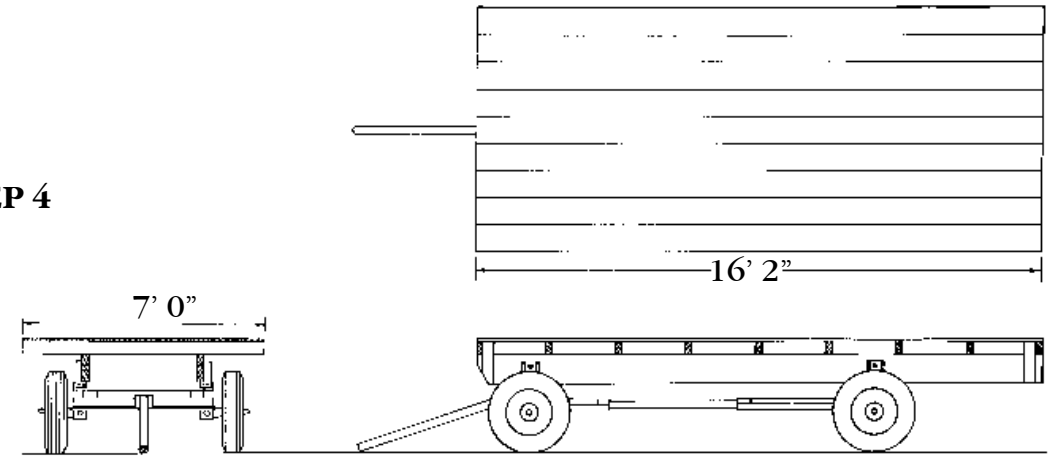

PLAN STEPS 5 –6

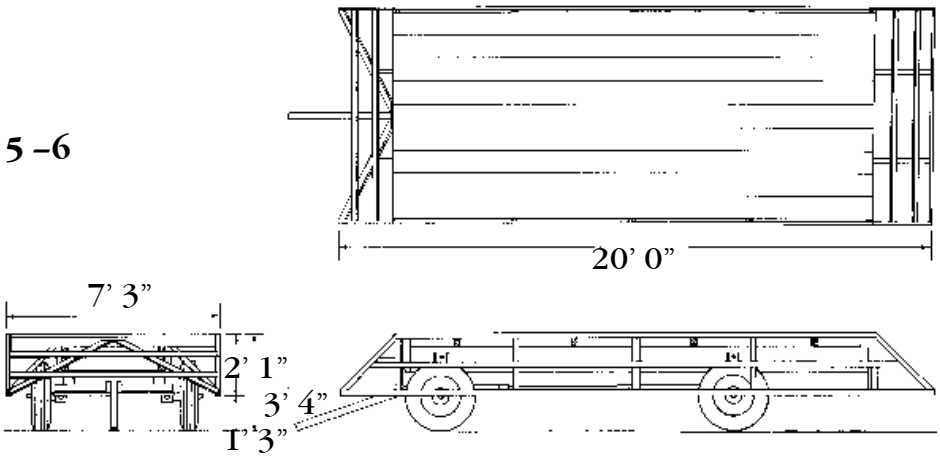

STEP 7

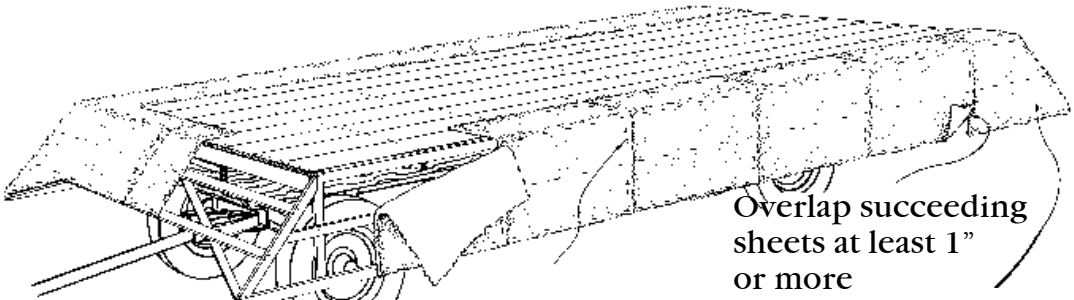

Overlap succeeding sheets at least 1" or more

Pin overlapping sheets together where material joins over open framework

Starting at the back, staple floral sheets to apron frame

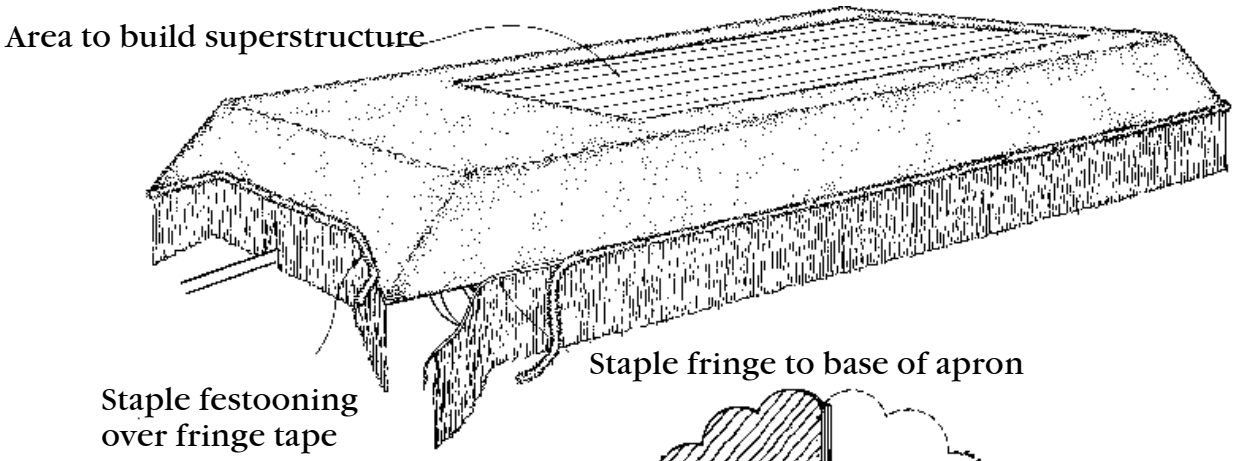
Area to build superstructure
Staple fringe to base of apron
Staple festooning
over fringe tape

Step 8

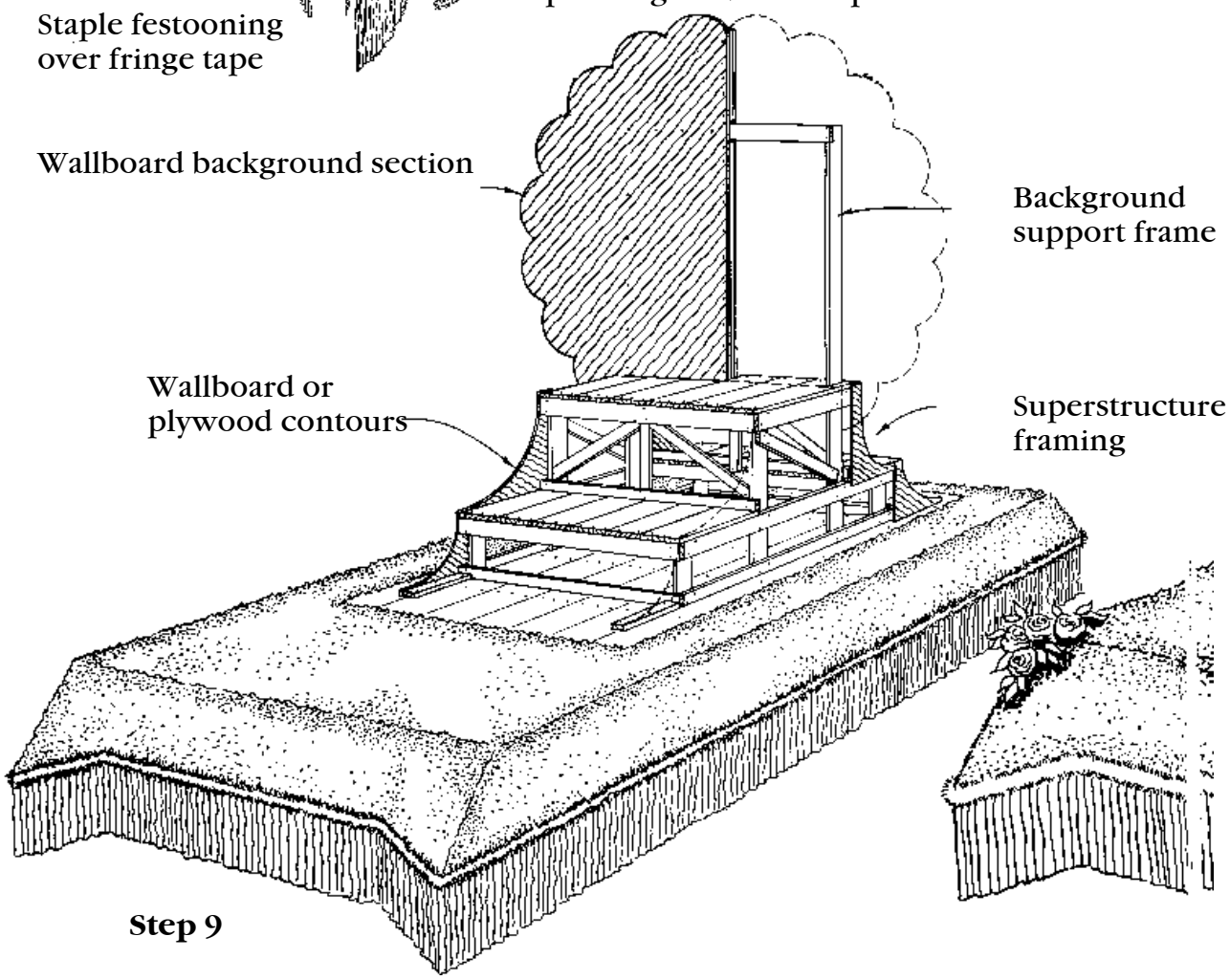
Wallboard background section
Background
support frame
Wallboard or
plywood contours
Superstructure
framing

Step 9

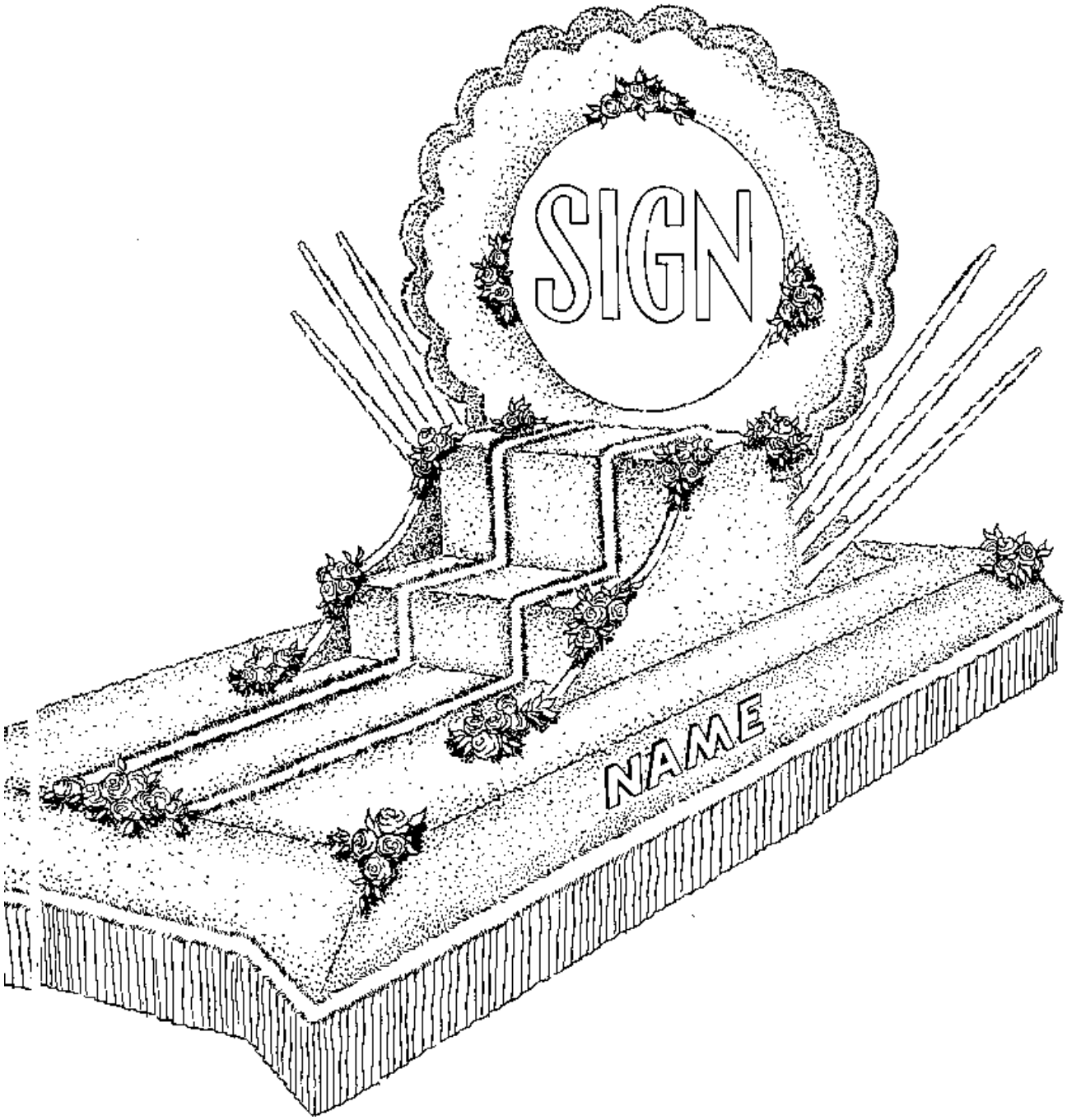

Step 10

WALLBOARD OR PLYWOOD CONTOURS

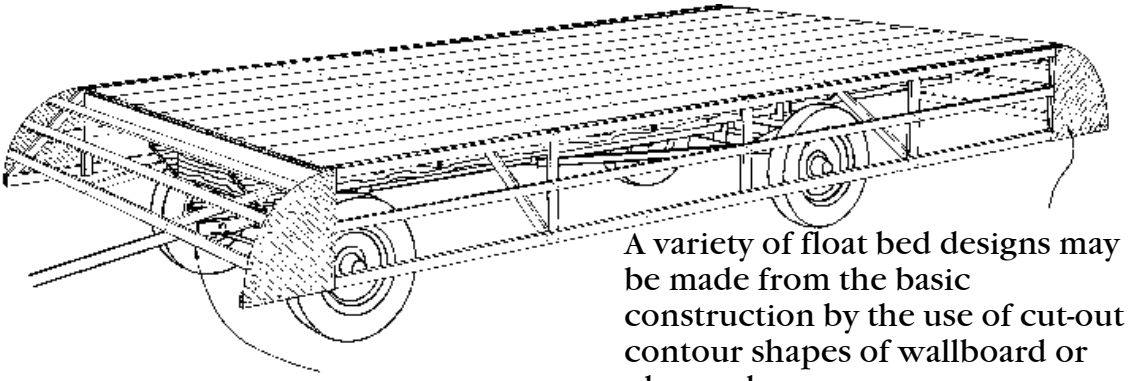

A variety of float bed designs may be made from the basic construction by the use of cut-out contour shapes of wallboard or plywood.

Nail 1" X 2" cross members between contours. Nail braces to these members from 2" X 10" stringers.

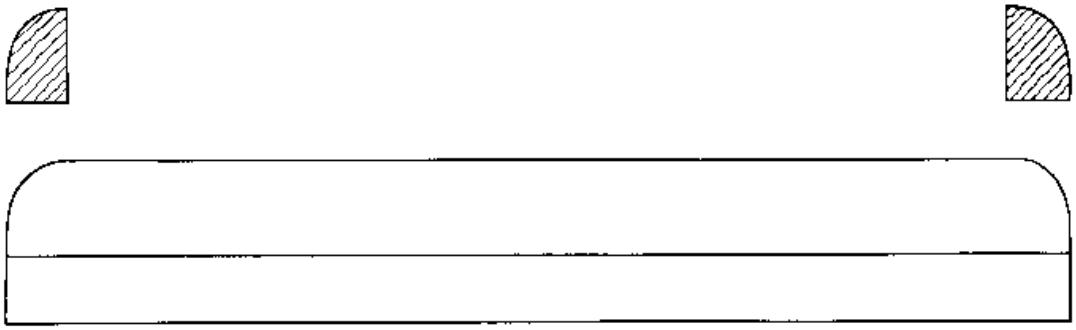

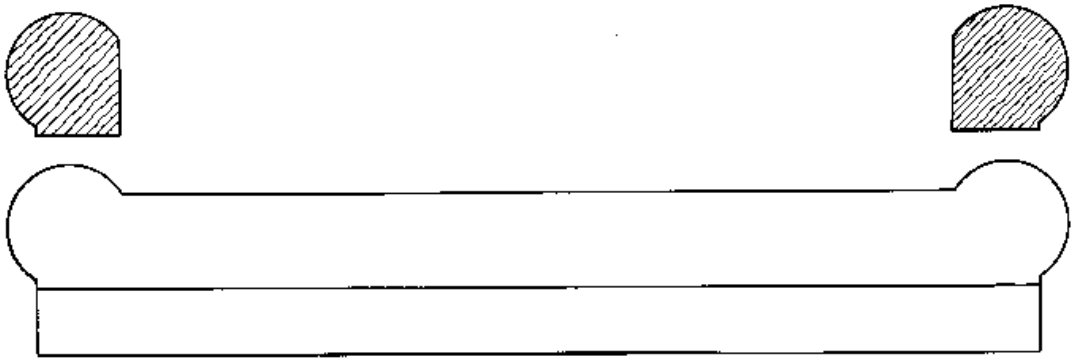

By the use of pliable wallboard attached to wood construction front and rear, you can easily disguise the box-like understructure. Curved or angular surfaces add to the streamlined rhythm of a float.

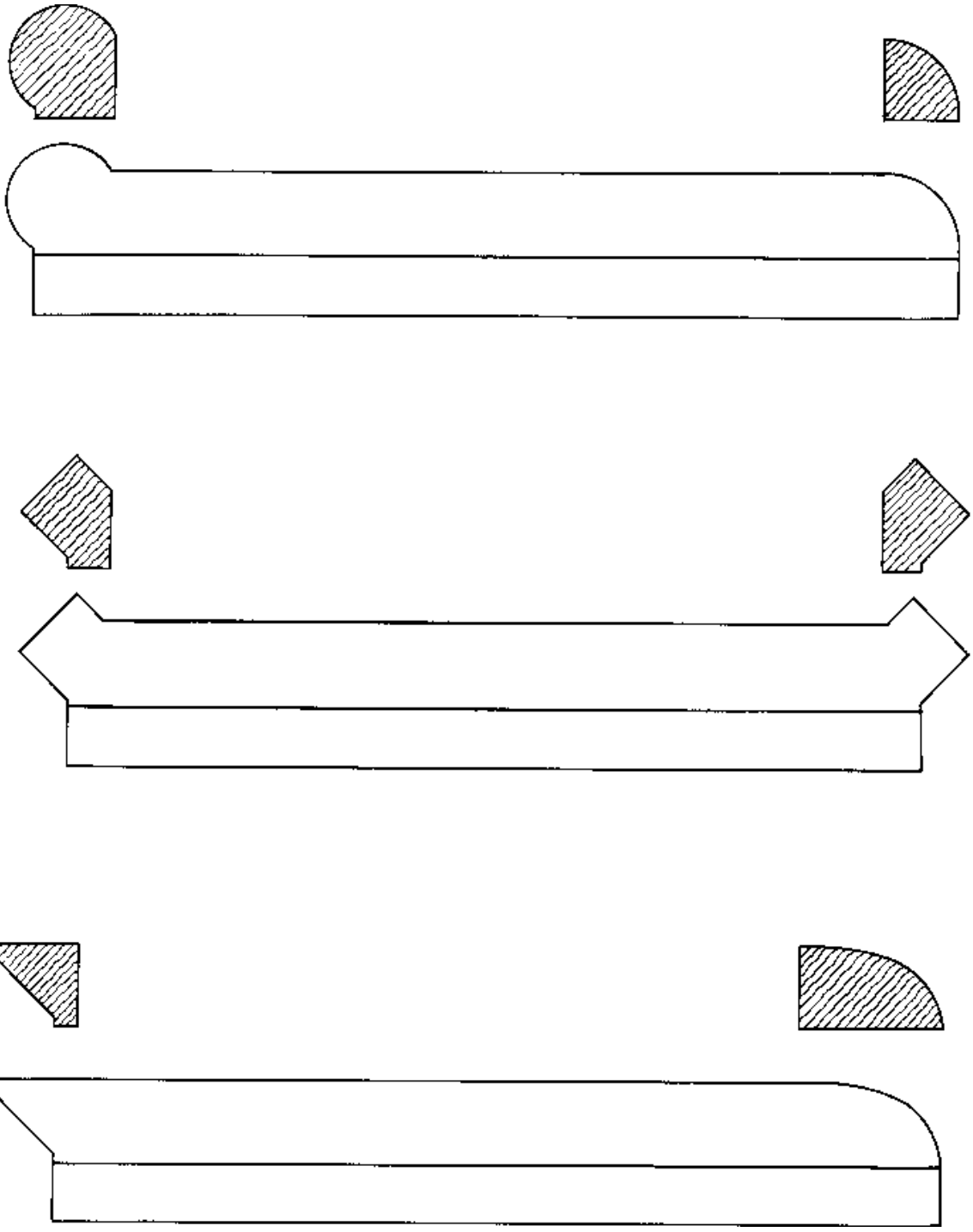

EXAMPLES OF SUPERSTRUCTURE

By the employment of simple geometric shapes based upon the triangle, the circle, and the rectangle, interesting elevations can be designed. Long flowing lines, curved or angular, help give your float a feeling of architectural scale.

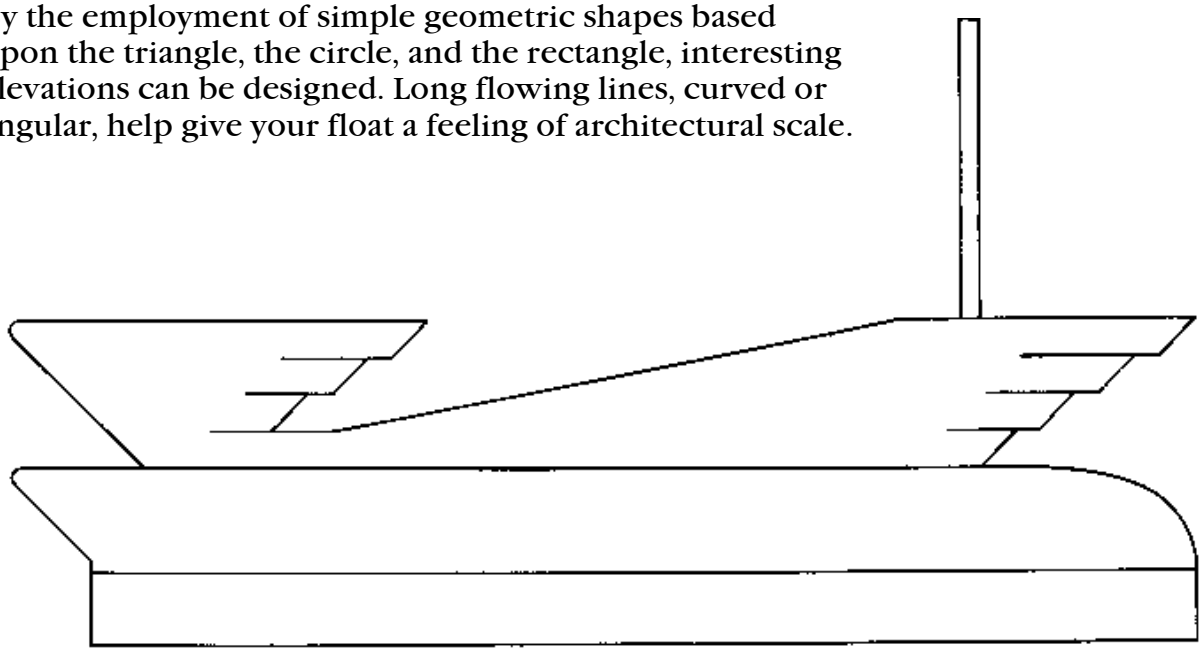

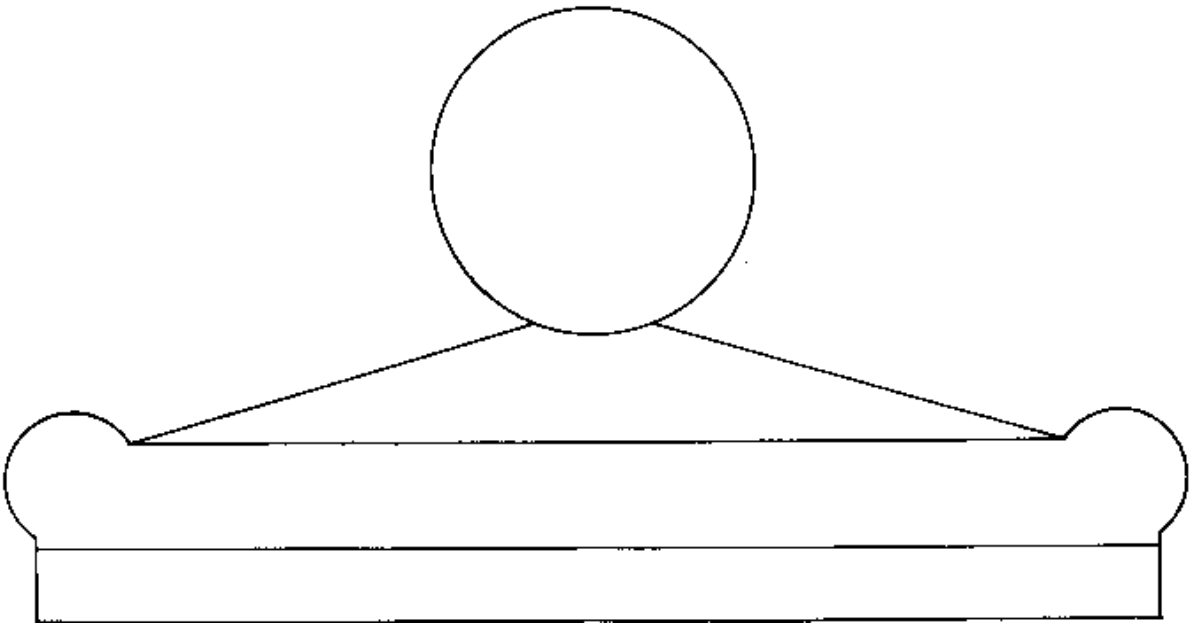

EXAMPLES OF SUPERSTRUCTURE

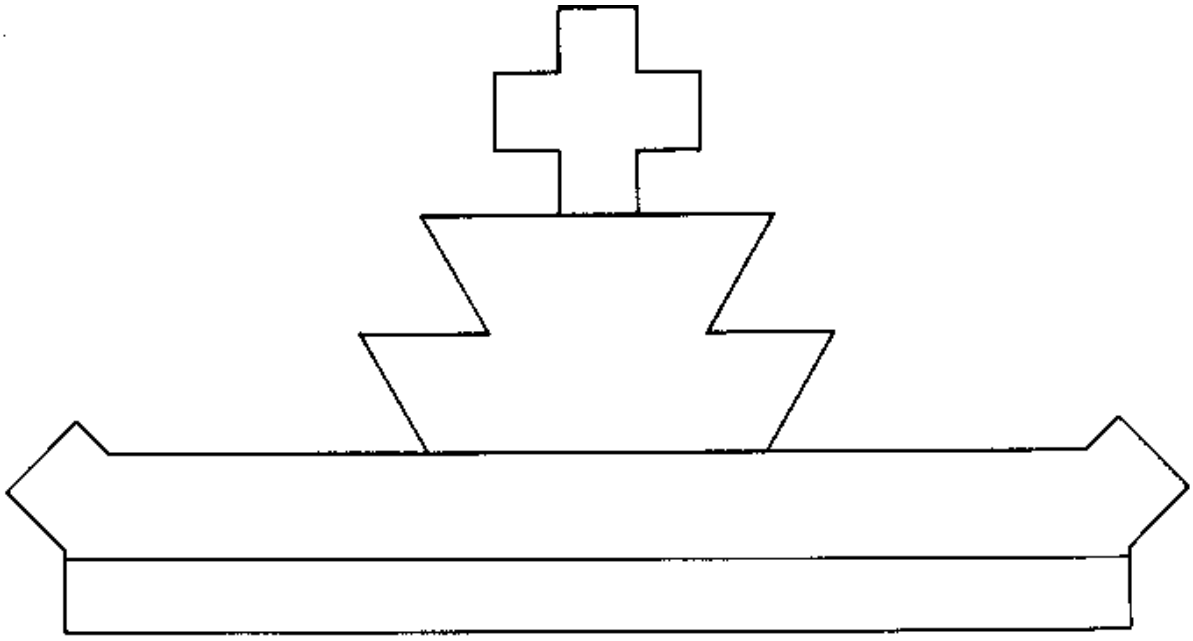

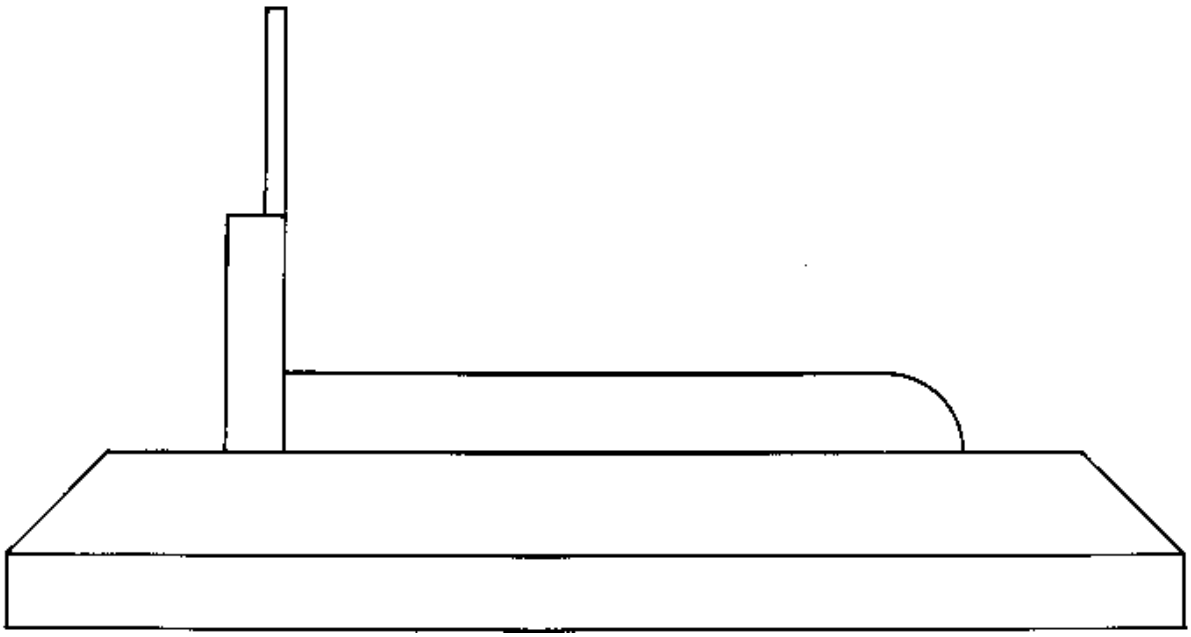

FLOAT DESIGNS VIEWED FROM THE FRONT

Parade audiences are curious to see the float next in line. The front elevation must, therefore, be given careful thought. Simple geometric shapes are the basis of many interesting variations.

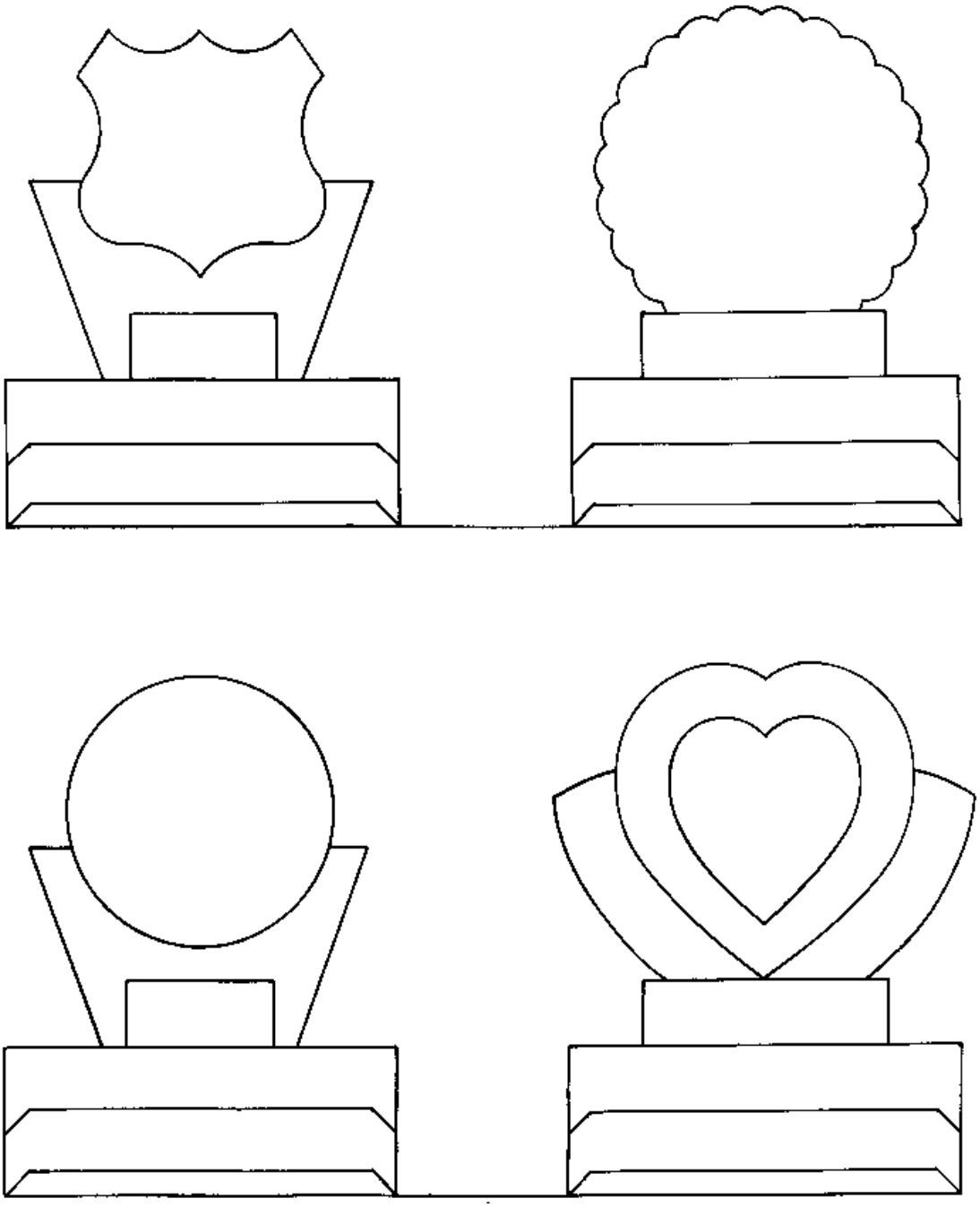

WATER PARADES: BARGE AND FLOAT CONSTRUCTION

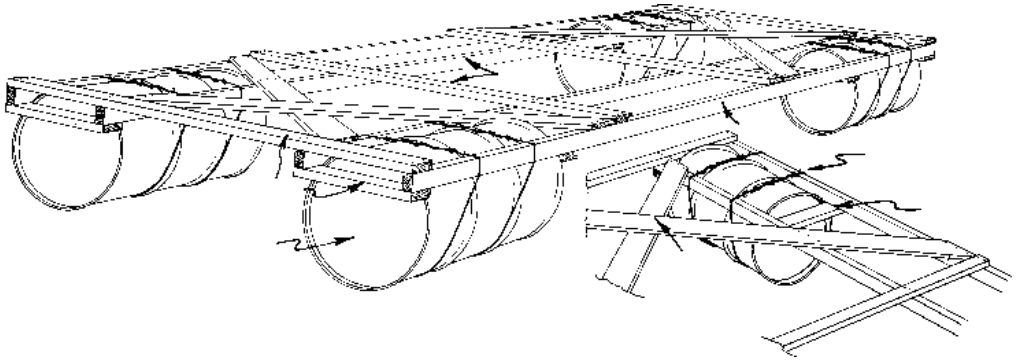

A barge, 8' wide and 20' long, suitable for carrying a float display on water, such as those pictured on this page, can be made with four 50-gallon drums and a wooden framework (Ill. No. 1).

Floats to be displayed in a water parade are constructed in the same manner as for a street parade with two exceptions: the barge (ill. No. 1) replaces the four-wheel trailer and the apron around the float is eliminated entirely.

Construction is started by building a flat platform the size of the barge, upon which the frame for the superstructure is built, the same as you would on a trailer platform. After construction, the float can be completely decorated, except for the fringe, and stored until the day it is to be entered in the parade.

The procedure for assembling a water parade, as outlined by the directors of the "Venetian Water Parade" at Ladysmith, WI, is as follows:

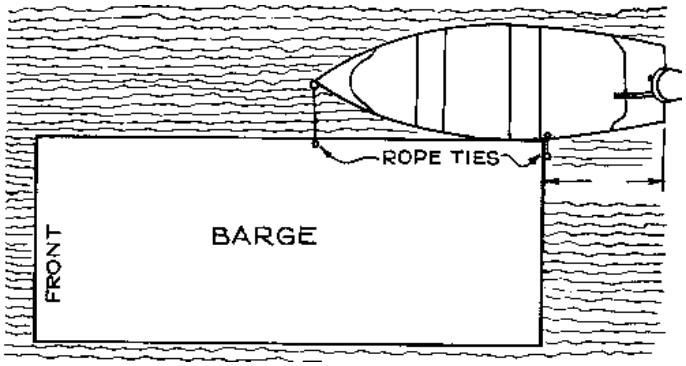

- ★ All barges are placed on the shore near the water.
- ★ The float displays are transported from the storage to the assembly area on large flatbed trucks.
- ★ The floats are transferred off the trucks onto the barges by the crew of assembly men.
- ★ The floats are then fastened securely to the barges with wire and the fringe is stapled around the edges of the float platforms.
- ★ A mobile boom crane, fitted with a durable cable sling that is looped around under each end of the barges, is used to lift the assembled units off from the shore and place them out on the water.
- ★ Each float is then tied to an outboard motor boat (as in ill. No. 2) and taken to the line-up area where it is anchored until parade time.

BASIC CONSTRUCTION OF A FLOAT FRAME FOR A FLAT BED TRUCK

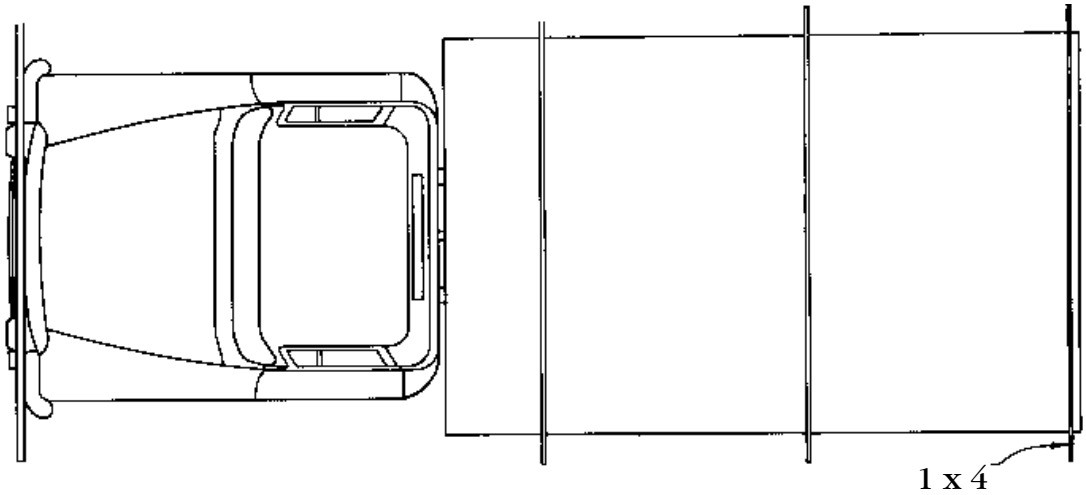

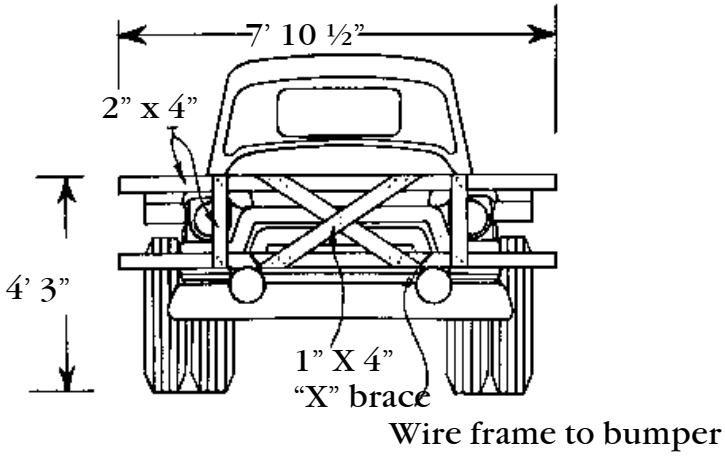

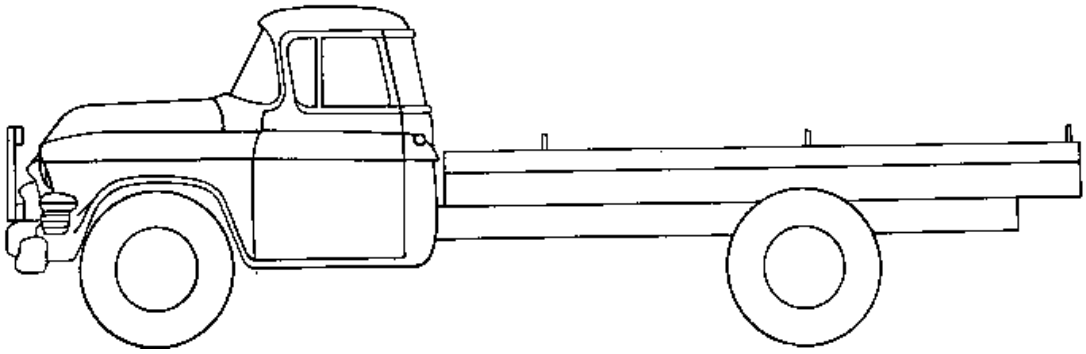

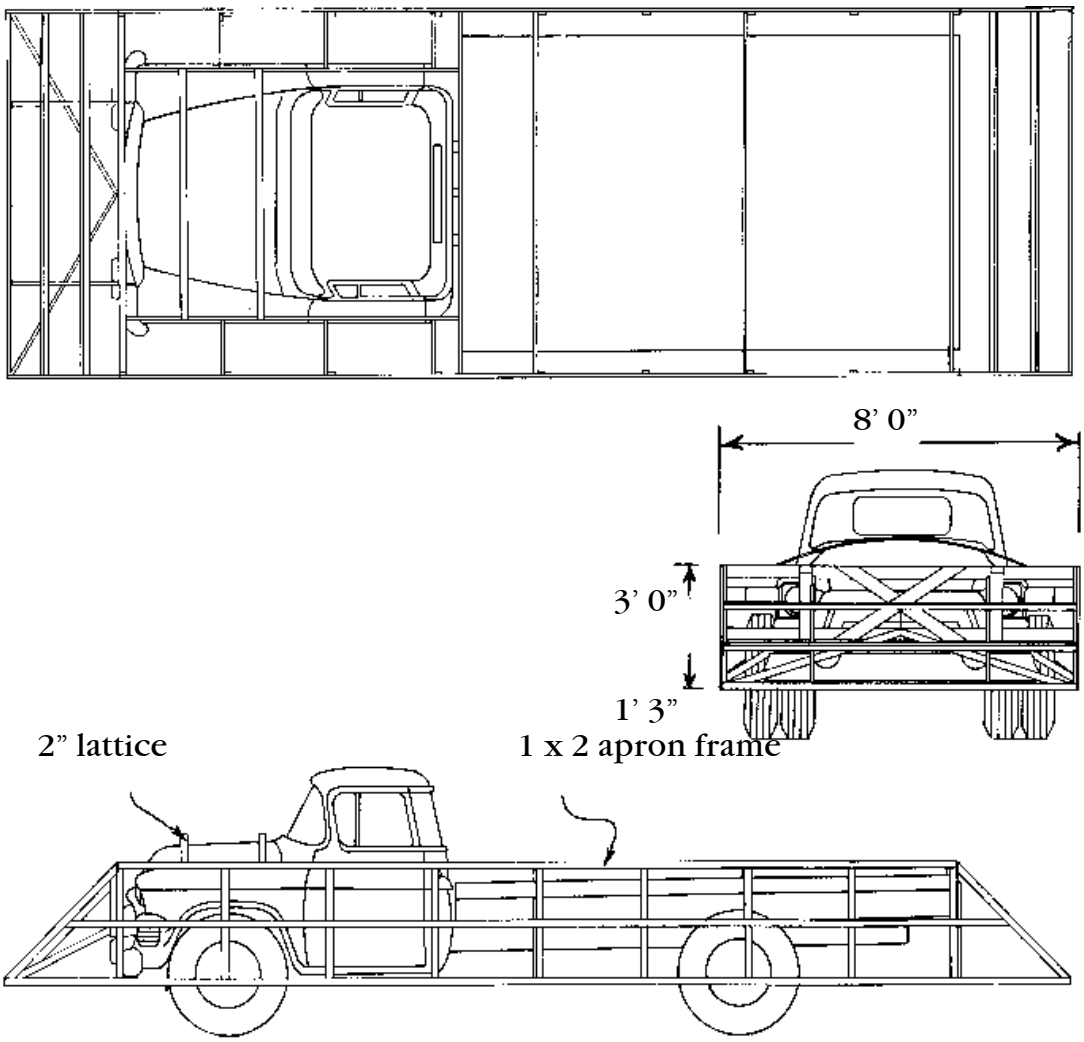
8’ 0”
3’ 0”
1’ 3”
2” lattice
1 x 2 apron frame

CAMOUFLAGING THE TRUCK FORM

Wallboard cutouts can be used to hide the truck cab and also to produce a sweeping shape at the rear of the platform. Many variations are possible.

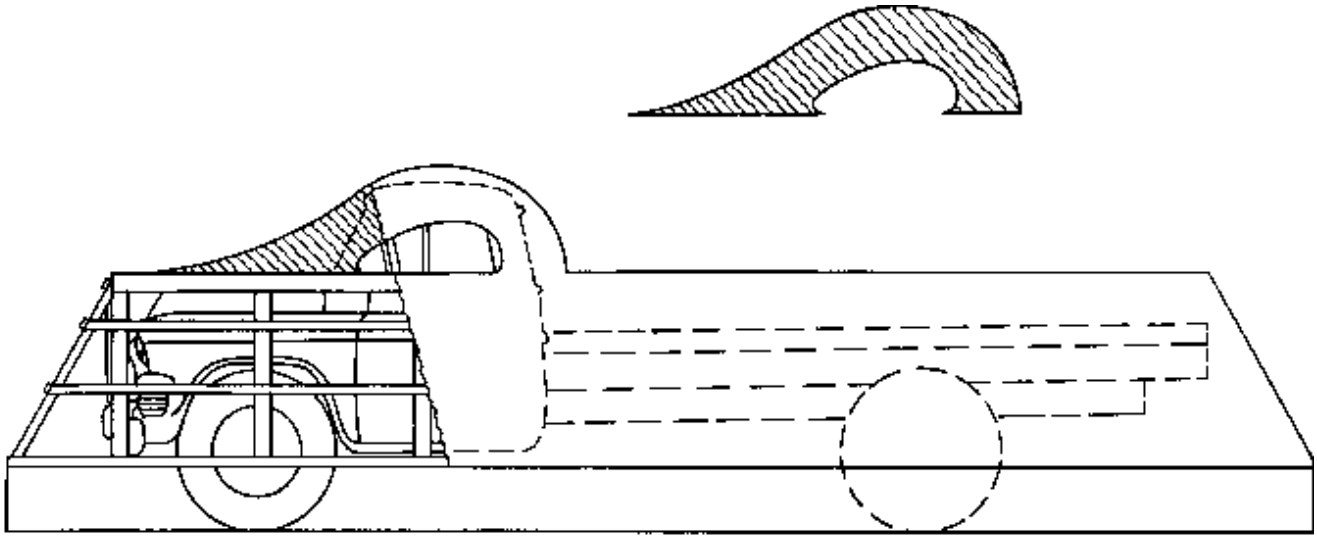

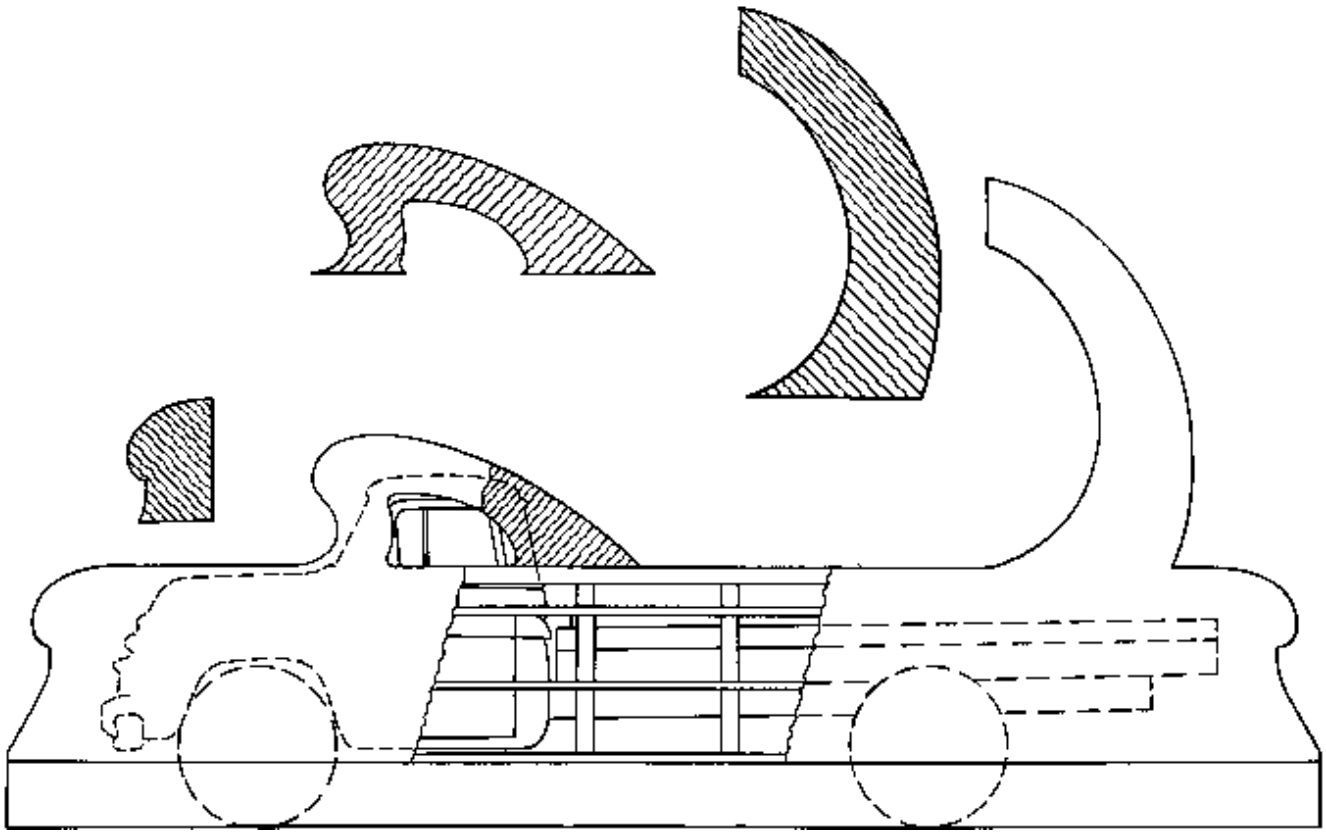

APPLICATIONS OF FLORAL SHEETING

Floral sheeting, the most widely used of all the float covering materials, is a product especially manufactured for decorating parade floats. This material, made in a variety of colors, has hundreds of tissue floral petals glued on a cloth backing, giving it a thick, soft, fluffy appearance. This material is produced in sheets approximately 1 yard square and can be cut into pieces and joined together again with pins without the seams showing.

1. After unpacking sheets, "fluff" out petals by shaking, as you would a rug.

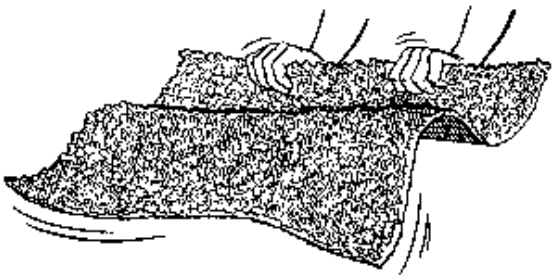

2. Floral sheeting may be torn into narrower pieces, tearing down the narrow weave of the cloth backing as illustrated. Use scissors for all other cuts.

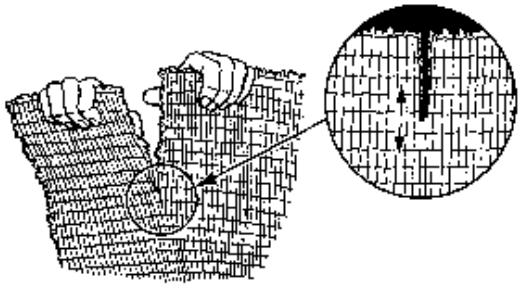

3. [A] Starting at the back, staple floral sheets to apron frame.
   [B] Overlap succeeding sheets at least 1" or more.
   [C] Pin overlapping sheets together where material joins over open framework.

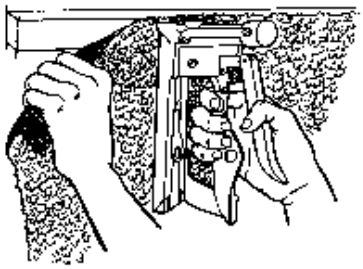

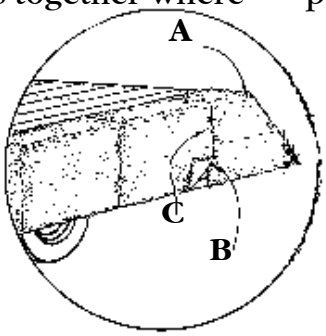

4. To pin sheets together, where the under side is inaccessible to punch pin back through the material with your fingers (such as chicken wire forms, etc.), use an ice pick to guide the pin as shown in illustrations A-B-C-D.

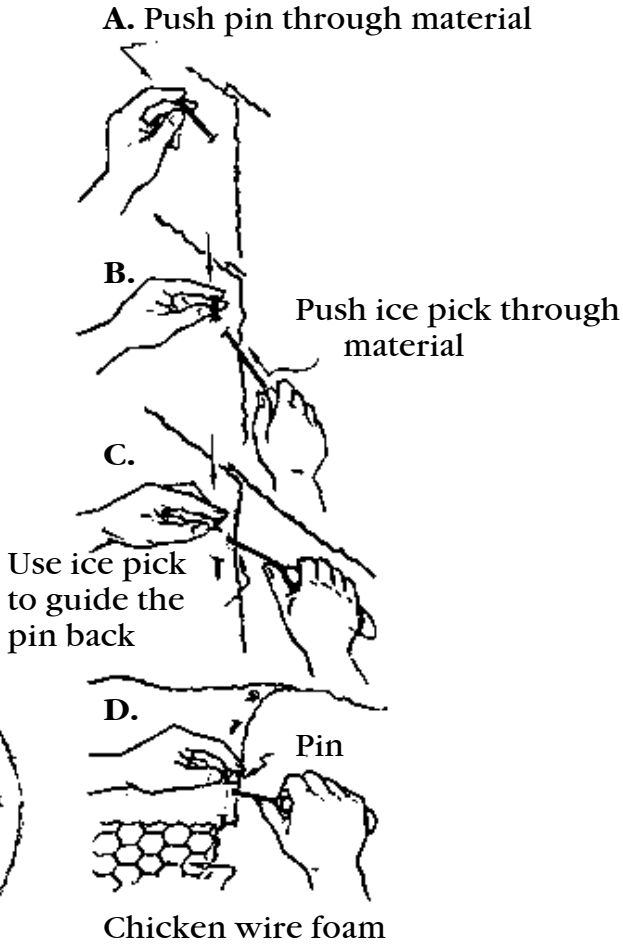

Foil Paper for Decorating Parade Floats

Foil paper is aluminum foil with a paper backing. This should be applied to solid surfaces such as wallboard, wooden platforms, etc.

After crinkling foil, staple securely to solid surfaces of float.

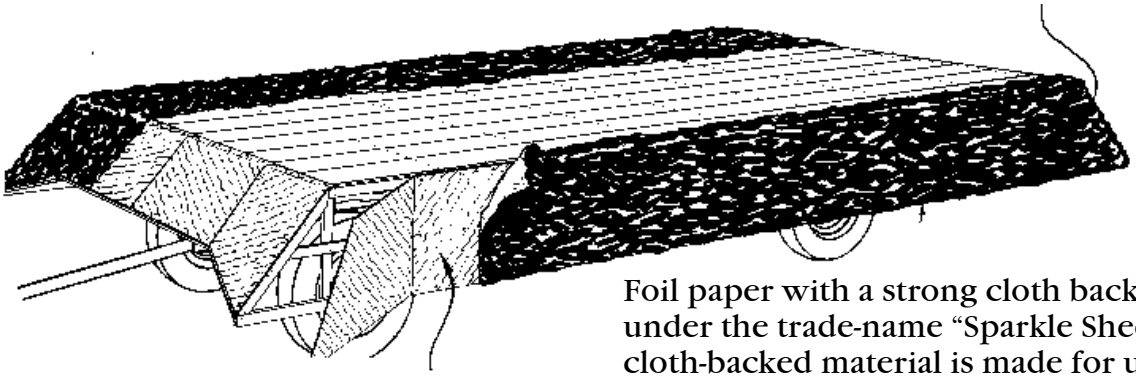

Foil paper with a strong cloth backing is produced under the trade-name "Sparkle Sheeting." This cloth-backed material is made for use over open framework, or it may be pinned onto irregular forms such as chicken wire contours.

Nail wallboard, boxboard, or plywood over open framework to make a solid surface for stapling on foil paper

1.Unroll foil paper

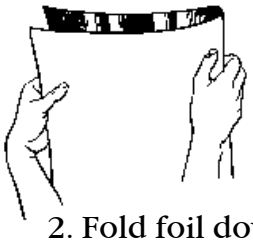

2. Fold foil down length at center but do not crease on the fold.

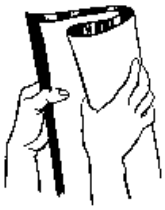

3. Repeat fold down the length of foil paper. Folded length should now be about 6½" wide.

4. Using both hands, crush paper together down the entire length of foil.

5. Open the folds and lightly smooth out the foil paper. It will then have a crinkly, sparkling appearance.

6. Fold under the edges along the length of foil paper.

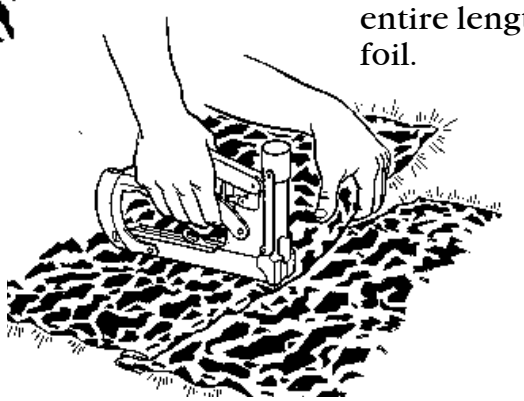

7. Staple the edges down and then staple at random over the entire surface of the foil paper to hold it down securely.

TINSEL FLITTER AND DIAMOND DUST

Many effects may be achieved with these sparkling products. Gold, silver, or colored tinsel flitter gives a glittering, diamond-sparkle to stars, cut-out letters, figures, etc. A beautiful, snowy, sparkling appearance may be had by using white diamond dust over white or light-colored paints.

Tinsel flitter and diamond dust may be applied with one of the following adhesives:

- ★ White latex adhesive
- ★ Shellac
- ★ Glue
- ★ Waterglass
- ★ Paint

1. Place object to be flittered on a large piece of paper. Apply a coat of adhesive on the portion of the object to be flittered, such as on the outline edge of a letter or over the entire face of a cut-out star.

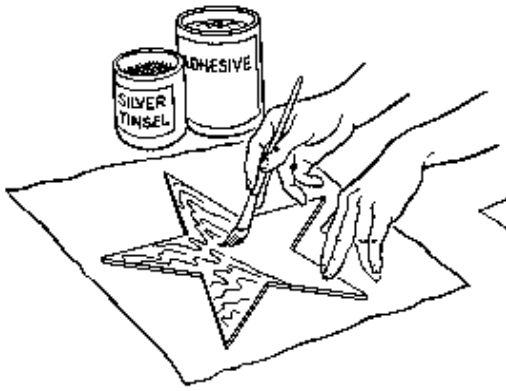

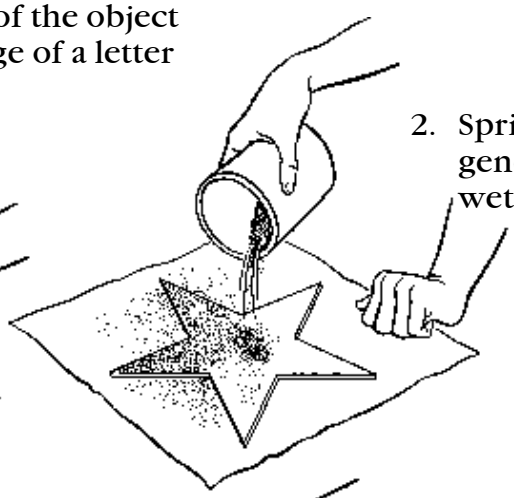

2. Sprinkle the flitter generously into the wet adhesive.

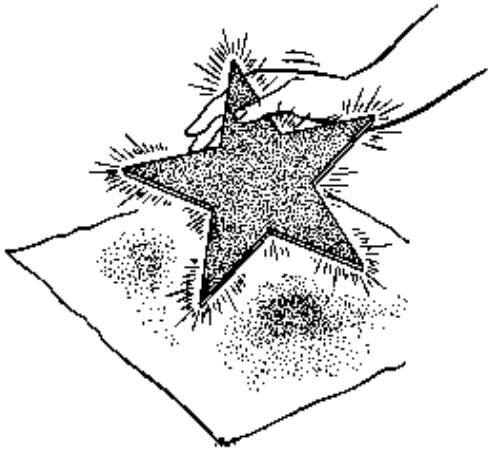

3. Lift the object and shake off the surplus flitter onto the paper. Lay object aside until adhesive is dry.

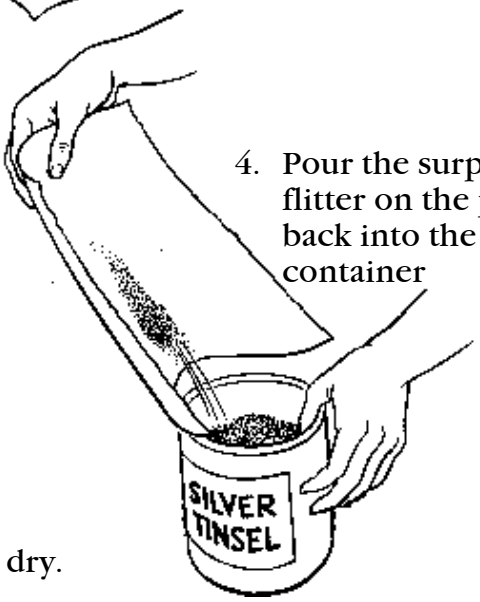

4. Pour the surplus flitter on the paper back into the container

THE APPLICATION OF CUT-OUT LETTERS TO FLOAT APRON

1. Arrange letters on float platform above the apron side to determine spacing.

4. Mark this measurement at each end of apron and drive nails at these points.

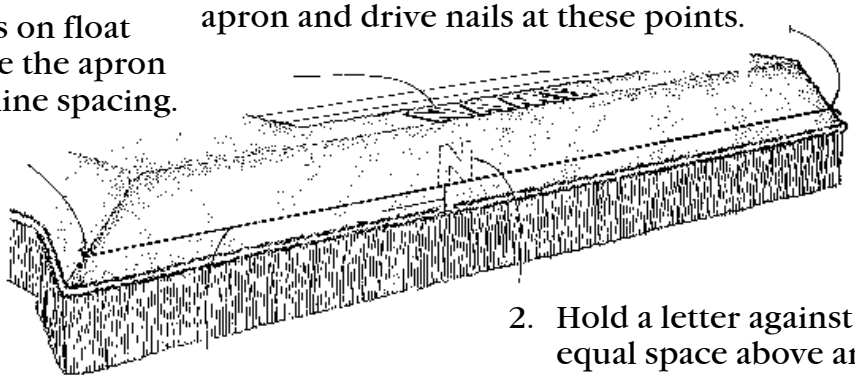

2. Hold a letter against apron side so there is equal space above and below it.

3. Measure space between lower apron and board and bottom of letter.

5. Tie a string tightly between nails. This is the lettering guide line.

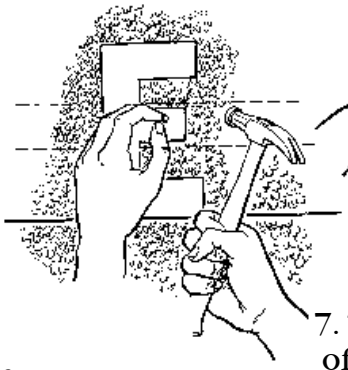

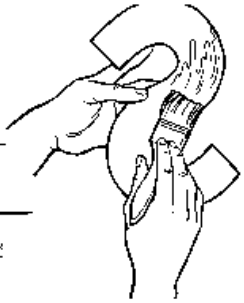

6. To fasten cut-out wallboard letters, place bottom of letter along guide line string and nail to center board of apron

7. To fasten cut-out letters of floral sheeting or foil paper:
(a) Apply a coat of adhesive to back of letter.

(b) Place bottom of letter along guide line string and press firmly over entire face of letter until it adheres to float.

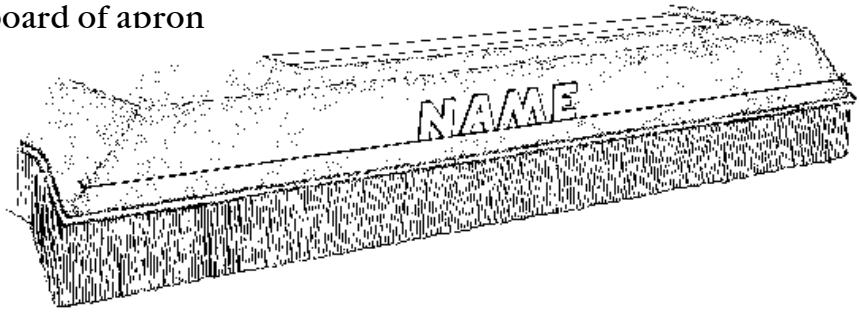

8. After all letters have been fastened to float, remove guide line string and pull nails.

FLORAL CAR DECORATION

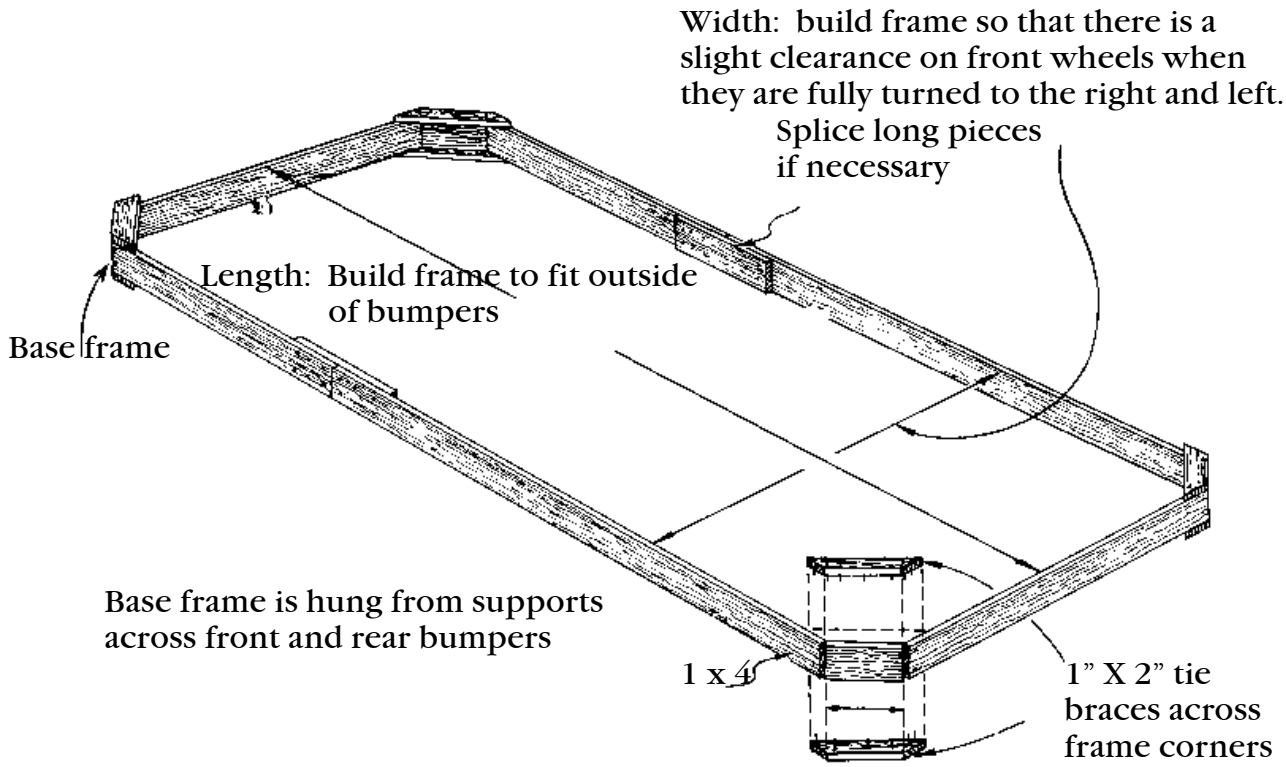

Hang base frame from bumpers as shown in illustration [A] or [B].
[A] For cars with bumpers close to body
[B] For cars with bumpers extended out from body

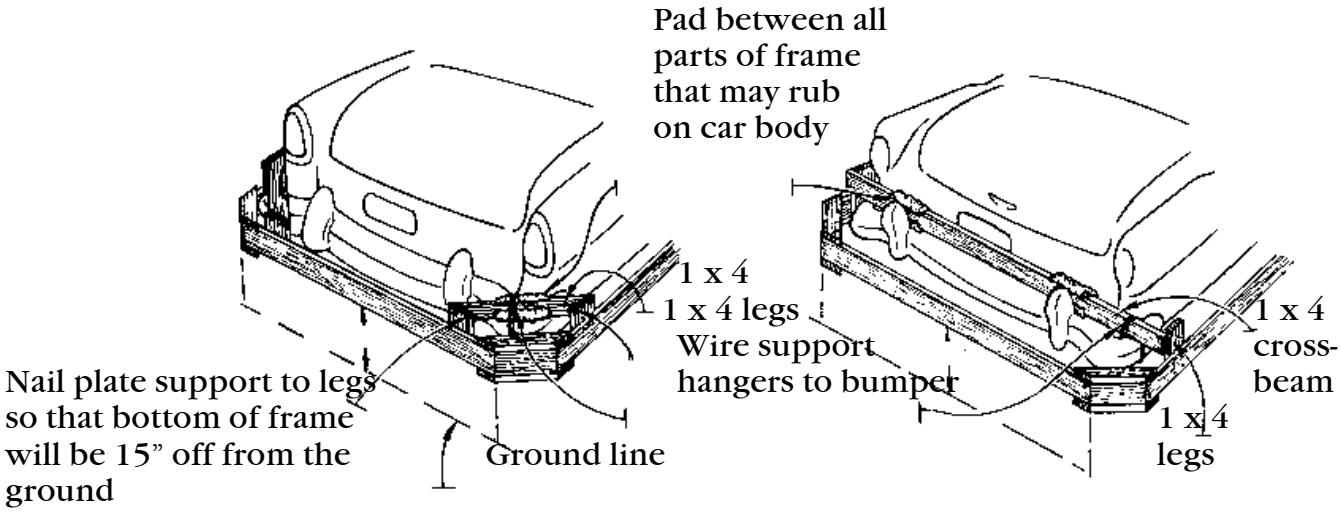

Starting at top of car, pin floral sheeting squares together to form blanket over body. Pin sheets to cloth strips frequently to hold blanket to car. Note: Always push pin-point back to outside so that it will not scratch finish.

Fasten flowers and festoon trim on windshield with tape and string.

Tie cloth strips to door or window handles inside of car.

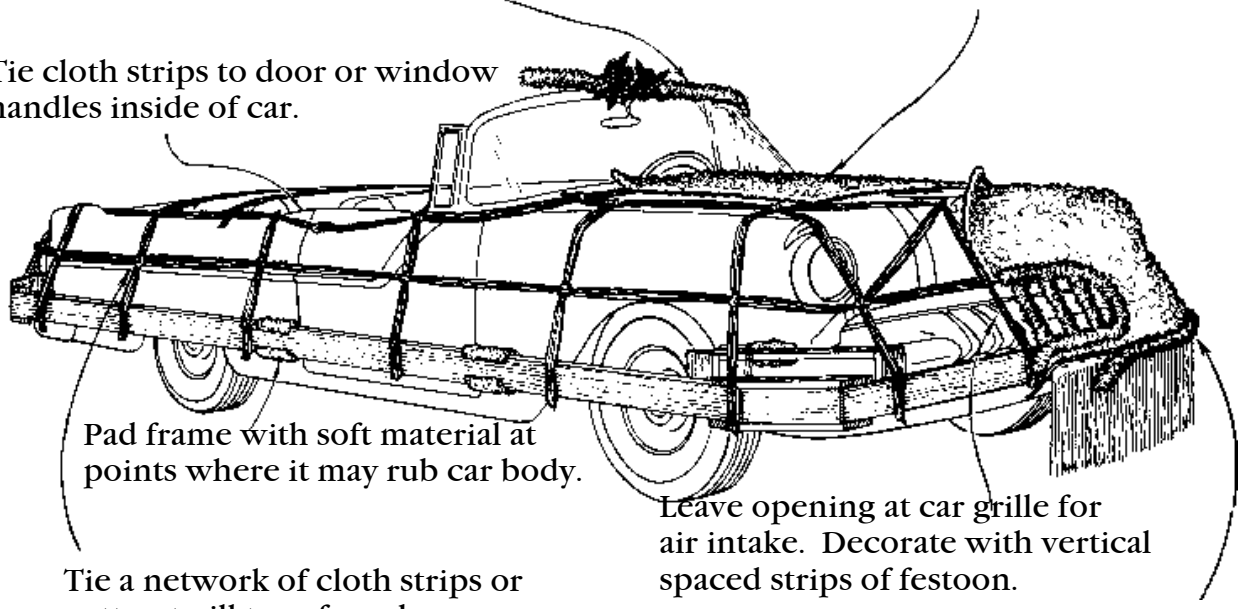

Pad frame with soft material at points where it may rub car body.

Leave opening at car grille for air intake. Decorate with vertical spaced strips of festoon.

Tie a network of cloth strips or cotton twill tape from base frame over body of car.

Staple floral sheeting and fringe to base frame. Trim fringe tape heading with festoon.

How to Fasten Festoon Decoration to Automobile

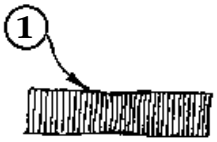

Cut pieces of string about 12" long. Cut pieces of decorator's tape about 3" long.

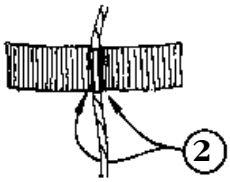

Tape string to auto at points where festoon is to be fastened. Press tape firmly down each side of piece of string.

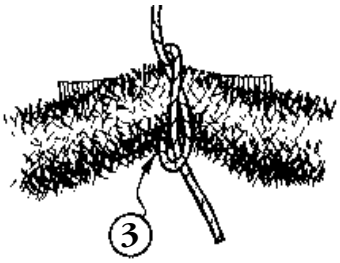

Place festoon over tape and loop the string around it.

To make rosettes at tie points, cut about a 9" piece of festoon of a contrasting color and roll into a ball.

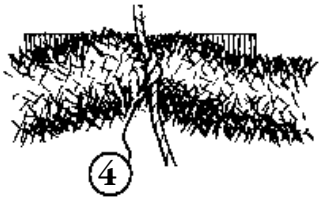

Tie knot in string (do not tie so tight that tape will pull away from metal). Cut off long ends of string if rosette is not going to be used.

Trimming Materials for Floats and Car Decorations

1. Tissue fringe is used basically as a drop between the apron frame and the ground to hide the wheels and give the display a "floating" appearance. It may be used, however, as an attractive decoration in many other ways, such as the examples in illustrations 2 and 3.

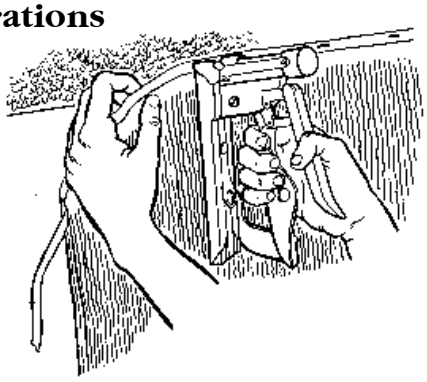

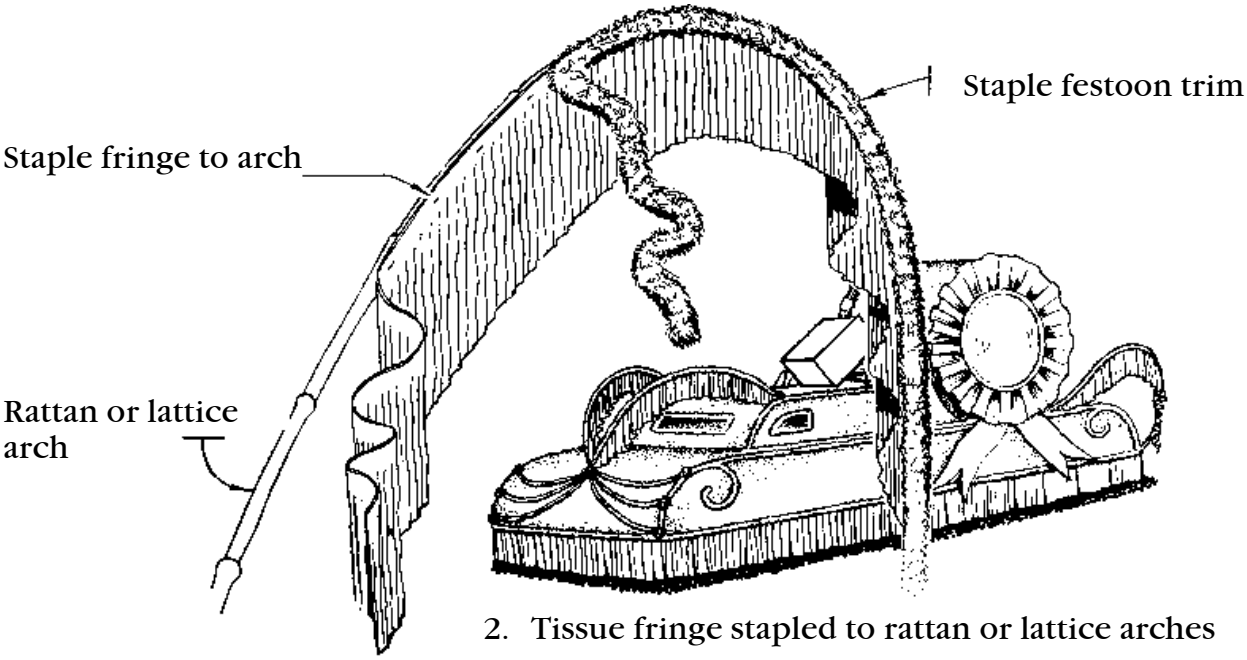

2. Tissue fringe stapled to rattan or lattice arches

3. Tissue fringe drapes

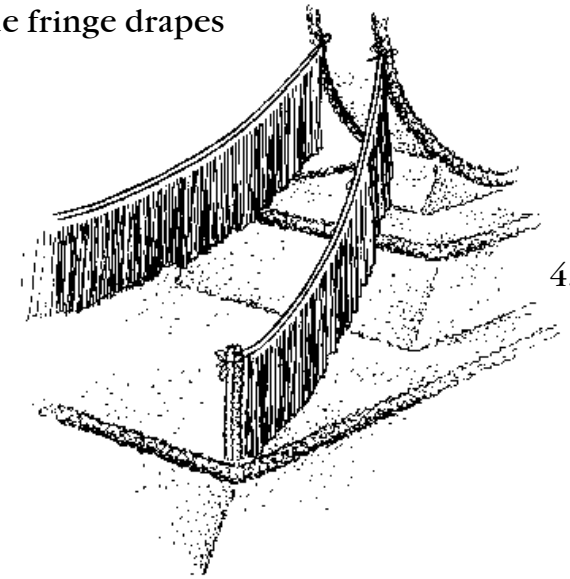

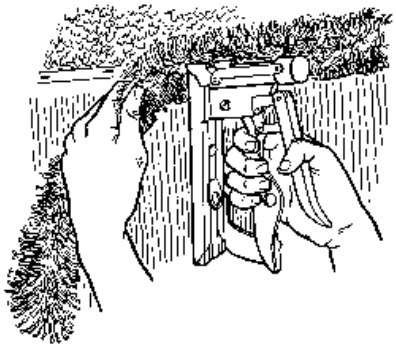

4. Tissue festoon roping, the most versatile float trimming material, may be stapled around apron base to hide the fringe tape heading, or be used to achieve several other decorating effects, some of which are shown in illustrations 5-6-7-8.

5. Festoon draped in a double row.

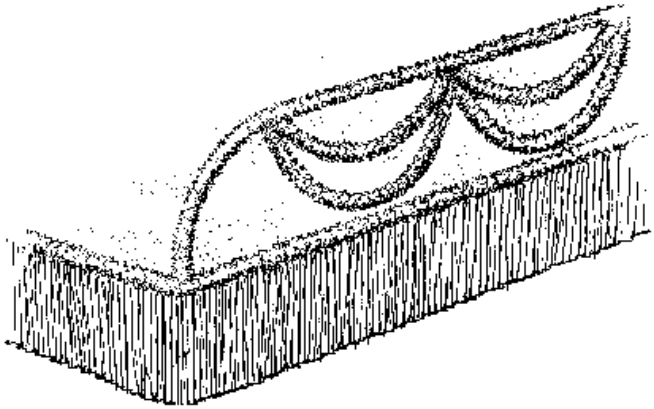

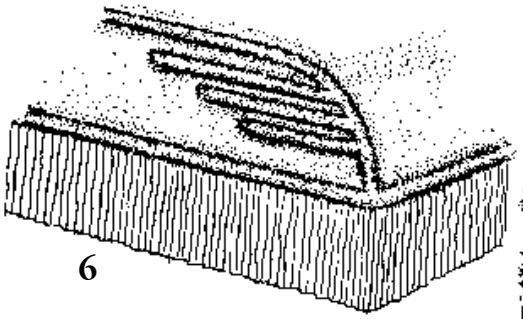

6

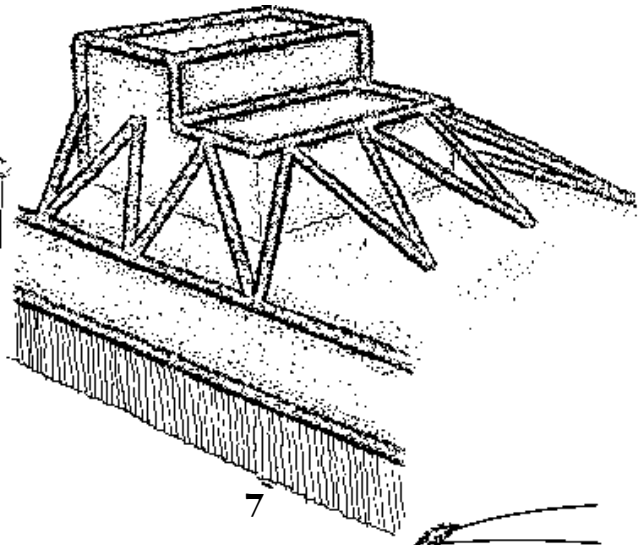

7

6. Modernistic lines of festoon

7. Festoon pattern trim

8. Car decoration

9. Tissue tassels of a contrasting color applied over fringe

10. Tissue tassels combined with flower rosettes and festoon drapes.

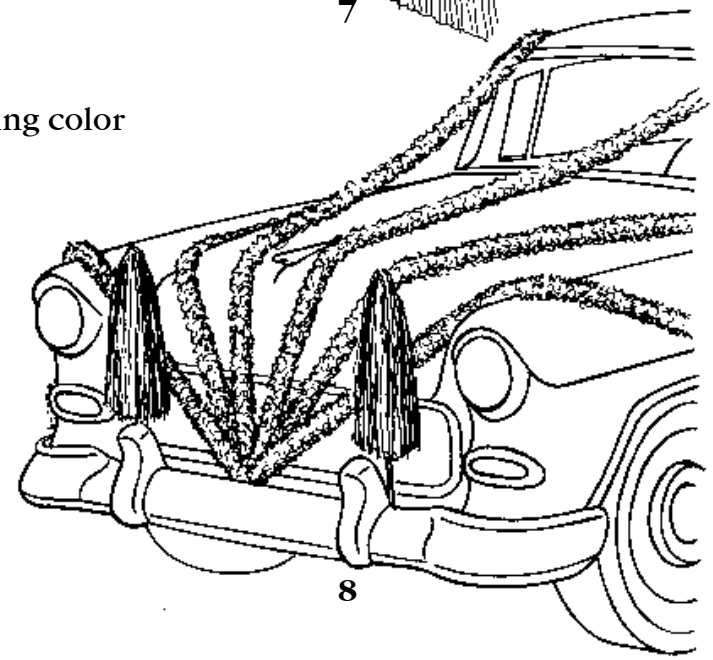

8

9

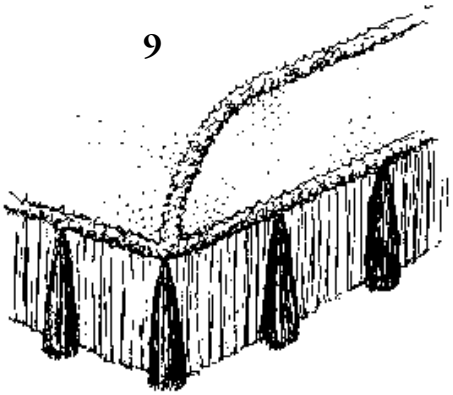

10

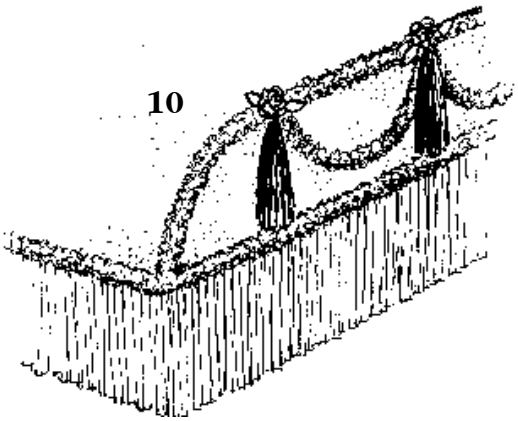

Basic Wiring Layout using 110 Volt Generator

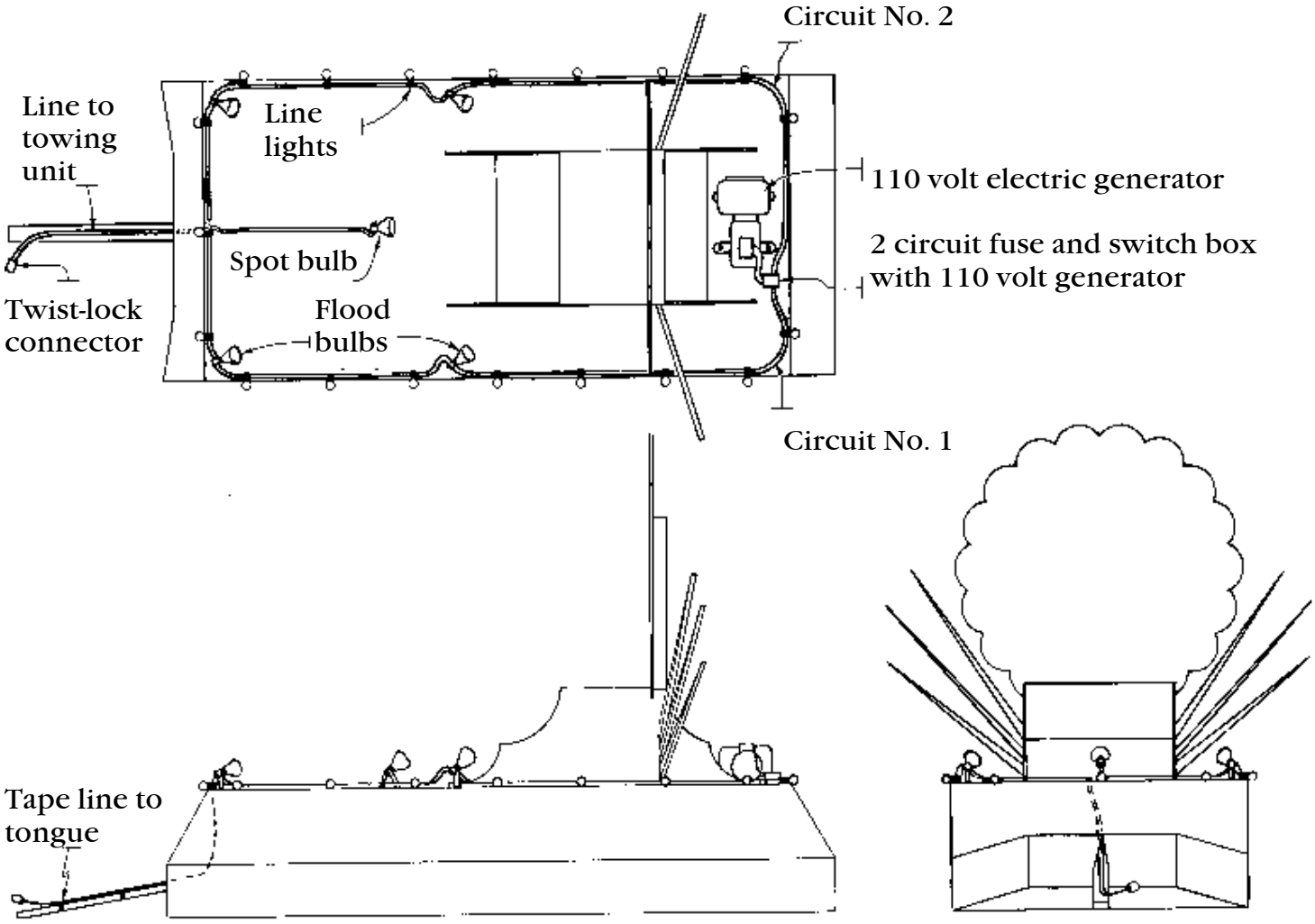

Pin type Bakelite sockets
This pin type socket, widely used for float wiring, is easily connected without stripping insulation by placing wires in pin slots and tightening base cap.

An inexpensive flood light bracket can be made with perforated pipe strap, a pin type socket, and a ¼" bolt. After mounting, the bracket is easily bent to direct the flood bulb to the desired angle.

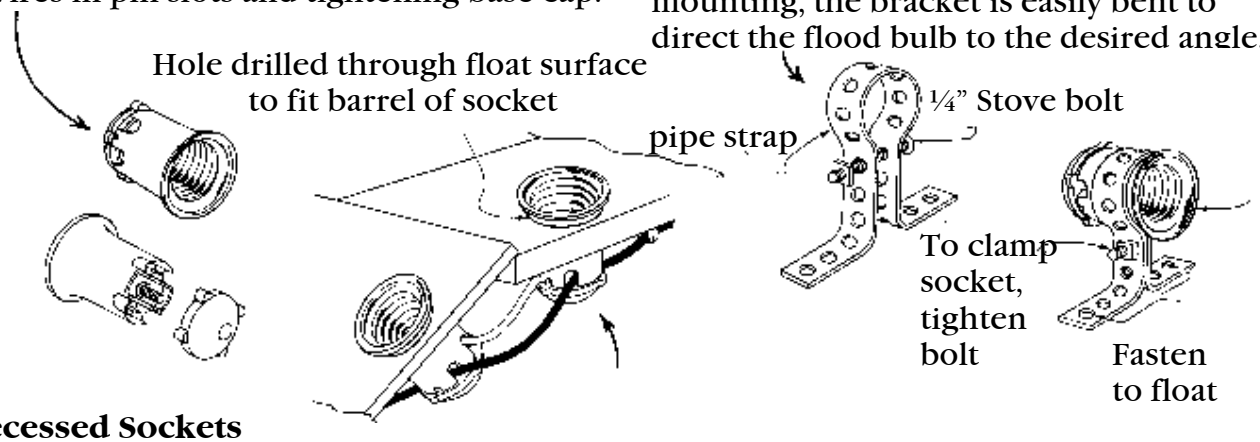

Recessed Sockets
This method of mounting allows wiring to be under the framework

Diagram of Battery Connections for 36-Volt Lighting System

When a 110 volt portable electric generator is not available for light power to illuminate a parade float, power for smaller voltage systems may be supplied with batteries. It should be taken into consideration, however, when planning your lighting with battery power, that the bulbs required (25-watt and 50-watt – medium base) for systems from 6 to 36 volts, may not be available locally and will have to be ordered from an out-of-town supplier. The reflector type spot and flood bulbs used in the 110 volt systems are not

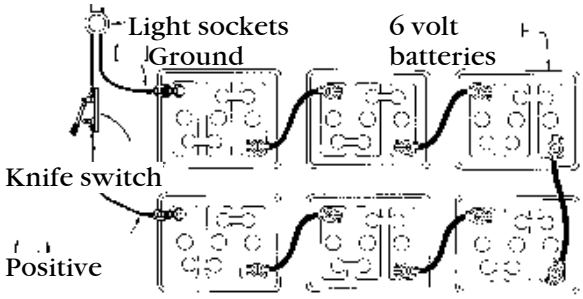

manufactured in the smaller voltages. Use the attachable type reflector made to fit over an ordinary light bulb, with battery powered systems. Use six batteries of 6-volts each connected in series.

Use 30 volt bulbs (25 watts each for general illumination, 50 watts each with attachable reflectors) Total lighting should not exceed a maximum of 600 watts, which is the equivalent of twenty-four 25-watt bulbs or sixteen 25-watt and four 50-watt bulbs. This system should give illumination for approximately 2 hours, starting with batteries at full charge.

Diagram of Battery Connections for 6-volt Lighting System

Use six batteries of 6 volts each connected in parallel. Use 6 volt bulbs (25 watts each for general illumination, 50 watts each with attachable reflectors).Total lighting should not exceed a maximum of 600 watts, which is the equivalent of twenty-four 25-watt bulbs or sixteen 25-watt and four 50-watt bulbs. This system should give approximately 2 hours of illumination, starting with the batteries at full charge.

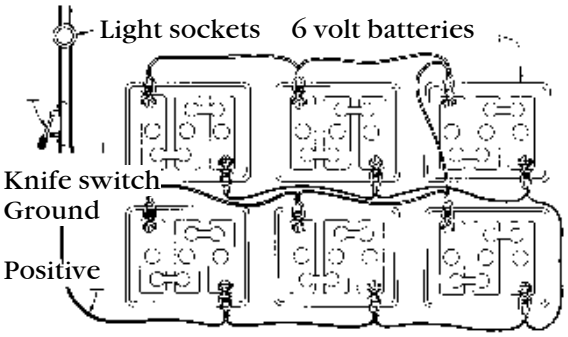

6 volt

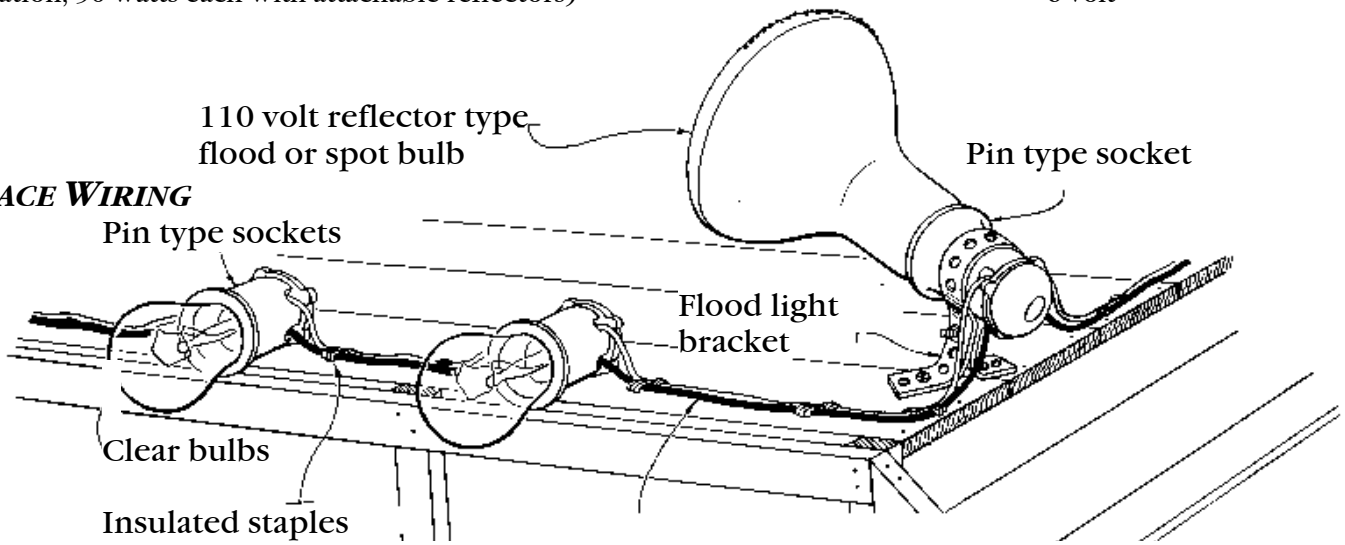

Surface Wiring

Extreme care should be taken when applying decorating material over surface wiring to prevent driving a staple into the wires. Take extra caution when applying foil paper because it is a good conductor of electricity.

EXAMPLES OF PARADE FLOAT DECORATING MATERIALS

Fringe adds a bright festive atmosphere to any event. Made of standard wet look Vinyl, fringe is the perfect trimming for any occasion.

Festooning is the economical way to decorate. It's method of manufacture also allows for more color flexibility than twist because it can combine five colors for your theme. This combination tissue/vinyl product is a great way to decorate large areas inexpensively.

Plastic Decorating Pomps. Do you like that old fashioned look, but need weather resistant material? Our Plastic Pomps come in a wide variety of standard and metallic colors

Vinyl Floral Sheeting is made of durable flame-resistant vinyl and comes in a multitude of rainbow colors

Premium metallic Sheeting is made of durable flame-resistant vinyl.

Examples of Parade Float Kits

F504 7' x 21'

F150A 7' x 16'

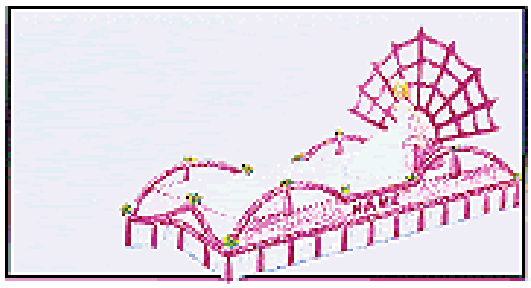

F503 7' x 22'

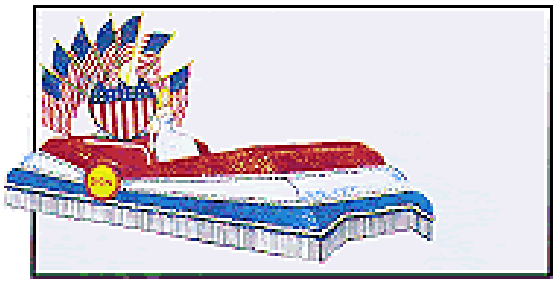

F169 7' x 16'

F710 7' x 20'

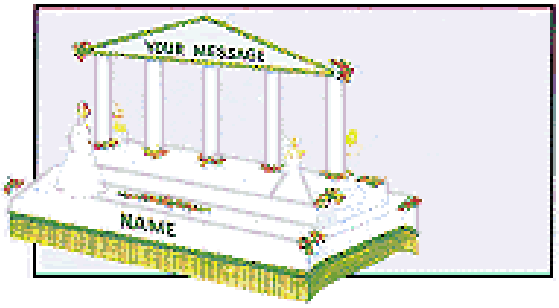

F509 8' x 18½

F184 7' x 21'

F170 7' x 17'

F602 7' x 18½

F436 8' x 16'

F451 7' x 15'

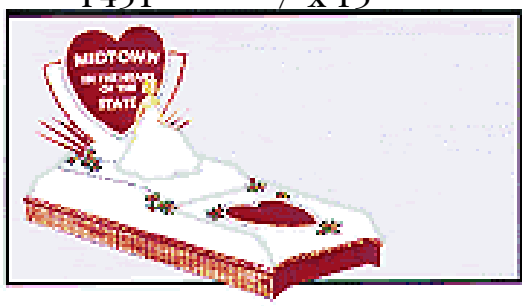

F618 7' x 20'

F300A 7' x 16'

F316 7' x 17'

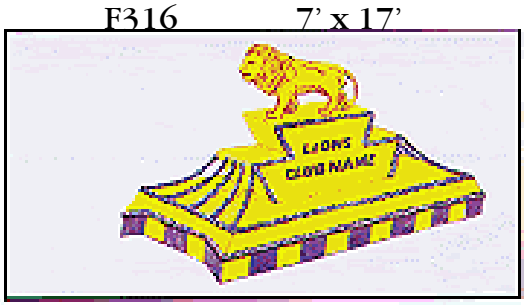

F310 7' x 18'

F308 7' x 18'

PART II – For the Parade Organizer

Staging a Parade

Staging a parade is a complex business based on a comparatively simple pattern.

It all depends on the Chair and the committees who have been given specific duties. For a large parade, some committee members spend some of their spare time all year preparing for their parade. A few may put in full time for most of the year to make the most of a couple of colorful hours.

In some cases, the Chair is called the grand marshal. In most instances the grand marshal is a honorary title given to the person chosen to lead the parade. Usually, the title goes to the highest-ranking military officer of the armed services in the district. It's a matter of custom, too, that the first float in the parade is that of the service represented by the grand marshal.

Ordinarily, the parade boss is the general Chair, or the paid secretary of the parade committees. It's not likely you will see the Chair in a float or an official car. More likely, he's at the parade launching site, seeing to it that the units get away on schedule and in order, to keep the parade a continuous, flowing show set to a steady pace so that no gaps show up to mar its appearance.

The Team

Working with the Chair may be committees devoting their efforts to publicity; to representing and getting a turnout of city, county and state officials; to police and fire department cooperation; to setting up committee meetings; to the building of floats; to float selection; to marching units; to musical units; to obtaining official cars; to selecting a route; to decorating the route; to welcoming and accommodating distinguished guests; to writing and publishing a program; to traffic; to selection of a queen; to parade news coverage; to judging; to parade formation; to transportation; to trophies; and to post-parade activity which is more important than it sounds.

There is the matter of entries, for example. Some parade organizations restrict the event to one hundred entries, and we might take that as an arbitrary limitation, although some parades will run longer, and many shorter. It may be possible that there are many more organizations than that wishing to enter floats, or bands, or marching groups, or equestrian formations, or comedy units. The line must be drawn somewhere.

For the parade formation, the committee attempts to pick the entries that will make the best parade, choosing ten bands, fifteen foot units, and sixty floats, for example— the usual proportion of units. The reputations of many—bands, for instance—will be known, or a prestige factor will be involved. Picking them is easy. The floats committee may be consulted to determine whether one float plan is more in keeping with the theme than another, and to judge who shall be included and who excluded. A conference may be arranged to induce two potential sponsors to team up on a single float.

The floats committee has it's own special problems. Except in the rare cases where all floats must be alike, variety is the element to watch for. Anyone wishing to enter a float must submit a plan and sketch. From all of these, the best variety of floats is selected, the parade theme, if any, being considered. If two competing businesses happen to come up with similar ideas, another conference is arranged, to let them thresh out their difficulties. The right suggestion from the committee at the right time here may save a good deal of mental wrestling.

It can be seen that without a smoothly running organization, developing a parade, even over a period of months, can resolve into a complex snarl. That's what all the committees are for—to avoid such an unhappy outcome.

Time and Size Limitations

A size limit is imposed not without reason. It's well to plan your parade to run no more than two hours. There was a time when a six-hour parade was not unusual, and an all-day affair occurred now and then. Things have changed, however. The two-hour limit fits many other show categories, and a good parade fitted into a two-hour schedule conforms to the well-proven vaudeville rule: Leave the audience wanting more.

A one hundred-unit size limit coincides pretty well with a two-hour time limit. A general rule is to space units one hundred feet or so apart— they can be closer together in a night parade— and you can figure an average length of fifty feet per unit. That gives you a total length of about fifteen thousand feet, roughly three miles, which would collapse down to a mile if the units run stern-to-stem. You have the marshaling problem to consider here—you must get a mile of units into a compact space at the parade's start, grouped so that each can move in order, and so spotted that the thousand or so people involved can find them and get to them.

You may set an arbitrary speed of not more than three miles an hour, which would take your parade past a given point in one hour. But the parade never moves as fast as you think it might. Three miles an hour is a good walking pace, actually too fast for marching units, and something of a problem to bands that play as they march. The stepping of marching units, therefore, is set at a theoretical three-mile pace. But the stride is shortened. This gives the illusion of a greater speed than a speedometer would actually clock, and it heightens the appearance of briskness. Other inevitable slow-ups will increase your running time a bit, but your schedule should fit well within your limit.

You'll find your audience is already on hand, and may have been in place—large sections of it—for an hour or two before the parade begins. For the audience, especially in the case of a well-heralded and eagerly expected parade, hours of waiting and watching aren't unusual. A longer parade would have many of these people exhausted and quietly departing, thereby thinning the street-side ranks, which are as much a part of a parade as the floats or the bands.

It should be emphasized that a parade is an extremely flexible organism, and that any rule you may make can be stretched. The spacing may differ between different units—between small floats it should be less, a large band should have plenty of freeway.

A census should be taken of all the personnel involved in the parade itself—the drivers, the dignitaries, the costumed models who ride the floats—because failure of any one of them to appear may cause delay after the head of the parade is a mile way. Among the more

inflexible rules should be one that all personnel are in position well before the parade is permitted to start at all, and they should be checked against the census list. Once on hand, they should stay on hand.

These, it might be well to note, are not the only people involved. Police must be assigned to keep curious crowds clear at the marshaling site, and to handle any emergencies that might come up. Firemen should be present with their equipment, just in case they are needed. Wardrobe attendants are assigned at many parades to see that costumes are correct and complete. And a latter-day necessity, with so many powered units in use, is the presence of service crews of men trained not only in the quick repair of automobile and power generator engines, but also in how to get at them through parade decorations.

The All-Important Route

Of prime importance, of course, is a parade route. Even though those who know the city intimately are entrusted to lay out the route, they should consult a map to spot possible bad corners or overhead obstructions. Once having settled on a tentative route, they should put it to the test by traveling it with a critical eye time after time, noting down anything—inclines, depressions, up thrust manholes, deep storm drain basins, streetcar tracks, bridges—that might cause trouble. Turns and corners are important Consultation with the floats committee will reveal just how much arc is possible for the largest floats. And cases in which a parade has become badly jammed because a float couldn't make a turn are, unhappily, not unknown.

The route should be judged not only for its ease of travel, but also for two other important considerations: its possibilities as to decoration, and its crowd space. A wide street, with broad sidewalks and free air overhead, generally is ideal. A parade run on a street where the onlookers must be jammed tightly onto narrow walks is a trial rather than an asset. The parade route is fully as much a part of the event as are the sections of it that move. The parade general committee may have picked a theme, and the floats committee may have selected float entries according to their suitability to that theme. The route itself should be decorated on the basis of the same theme, or, if no particular theme has been chosen, just decorated. The businesses lining the parade route may be trusted with portions of this task, but it's up to the route decorations committee to see that decorations are harmonious. Usually, street decoration is handled as one overall job.

How long a route should be chosen? Not as long as you might think. The route committee must remember that there are hundreds of marchers, possibly using unaccustomed footwear, some of them carrying musical instruments or equipment.

It must be kept in mind that engines of automobiles and tractors, proceeding at what is a snail's pace for gas-powered equipment, may overheat, and that generator engines mounted in floats beneath layers of decorative material may not be getting enough air to keep them cool. It must be remembered, too, that the parade day was set months ago, and that the show goes on 'rain or shine' whether a thundershower sweeps the area, or the thermometer climbs to a hundred and ten. The paraders will have to undergo whatever the elements dish up, and overlong exposure would add to their trials.

A general rule is to set a route the length of the parade itself, with possibly a bit added. For a three-mile parade, a four-mile route

should be the outside limit; even that is a long walk. A little more distance might be allowed if the route is circular, winding up where the parade started.

The route committee must consider the location of the officials' and judges' grandstand, spotted far enough along so that the parade has smoothed out and is running at its greatest efficiency, but not so far along as to afford any hint that the dispersal point is near. A reviewing stand too far along the line of march is apt, too, to be witness to some foot-weariness. A general rule is to place the stand inside the one-half point, at mile one, say, of a three-mile route. Don't neglect the reviewing stand in making your overall plans. It's from this that some of your revenue comes. A parade is free entertainment, but the reviewing stand offers seats to those eager to pay for choice locations for viewing. And receipts from a good reviewing stand may total a respectable figure.

The Parade Arrangement

A diplomatic grouping of the various units is afforded by the division system. The parade is run off in divisions, four in the case of most standard-dimensioned events. Each division has its division marshal, who is delegated the responsibility for getting this own section under way.

Diplomacy of several types is necessary in allotting space in the parade line for bands, floats, marching units and all the other displays that go to make up a parade.

Of first consideration is the placement of bands. They must be spotted far enough apart so that the music of one doesn't set up an unintelligible discord with the tunes of another. The uniforms are taken into consideration. Bands with similar dress are placed in different divisions, and kept as much as possible at a distance from each other. The music committee may have to determine when one band shall play and another keep silent, dictating a sort of musical game of catch to avoid conflict. A band may be allotted a set space, but if it has a corps of drum majors—and a skilled group of well-costumed majorettes may be one of the most glamorous features of a parade—this may be given space of its own, with a briefer interval between it and the band.

The floats are next positioned. The demands of variety are important. Two floats of similar color, size or shape should not be near each other, and diplomacy may be necessary here. Competing commercial organizations may carry their rivalry into the building and display of floats. Some large stores, for example, build big floats of permanent character, and send them to several parades during the season. These must be given equal prominence in the parade formation, and what the sponsors consider prominence may differ in a large degree from the committee's estimate. Let them lead different divisions, perhaps. And point out that the favored vaudeville spot, next to closing, has no value in parade formation.

The marching units are placed between bands and floats, split up according to divisions, and spaced according to size and uniforms. Comedy and novelty units are positioned to function as accents; in some cases one of these may be part of a float or marching display, and its position is foreordained. Having set up a plan, the committee goes over it again and again, hoping it has made no errors, and then submits it to the parade participants, some of who inevitably will request changes and seek adjustments.

The Headquarters Division

The first division is known as the headquarters division, and is usually the largest and brightest. The grand marshal's detachments are in the forefront, and it is usual to spot some of the biggest and brightest floats in the headquarters division. It's parade psychology to make as much of an impact with the head of the parade as possible. It's also parade psychology to permit no letdown once the impact has registered. Spread out your values.

At the front of the parade, the police motorcycle units and the line of official cars serve, as appetizers, for what should be a tasty first course and generally a good dinner.

The rest of the parade should not be robbed to make something stunning of the headquarters division. The attractions of variety should not be forgotten, but neither should the impact of repetition. At least one or two of the best floats should be saved for each of the other divisions, and spotted well up toward the head, or well enough along to renew the impact on the audience before the next division comes into view. Animation in a float must be considered in assigning it a place. If only a few of the principal floats have self-contained action, they should be apportioned to different divisions. It must be kept in mind that an animated float holds the onlooker's attention longer than one equally spectacular, but without moving figures. The spacing, then, might be increased.

Different experienced parade chairmen have differing sets of procedures for spotting and spacing entries, but these must always be flexible. So varied and attractive are the entries in many a parade, that the idea of compromise must govern what location assignments are made. The artistic touch is a help in blending color and mass into a unified whole.

Sometimes, for example, a mobile comedy unit, mounted on a motorcycle or riding in a special car, may not be positioned at all, but given Carte blanc to roam the line of march on the margins, doing its act at will. A display of this type may be used to enhance parade continuity. In this case, however, the unit starts out after a good section of the parade is already under way, so that its activity is not too much concentrated around the headquarters division, wearing out its welcome. Experienced show people do best with this sort of assignment, but the same idea has its other applications. In the case of an unwieldy parade and a huge crowd, policemen may be costumed as clowns—always as comedy cops, of course—and assigned to tour the parade on motorcycles, keeping order. Several of these units, well handled, make good mobile accent points, and the grotesqueness of comedy points up the grandeur of spectacular floats and the formality of marching units by contrast. In any police department, you'll find personnel who jump at this type of assignment.

Have A Schedule

Once having set the form of the parade, and its route, the general committee sees to it that all participants get copies of the schedule, together with a map of the route and of the marshaling and dispersal areas. Included should be clear and precise instructions as to where each float and unit is to be stationed on parade day, and at what time. Drivers especially should be rehearsed in the matter of pre-parade placement.

It is well to impress on all concerned that a parade is a show, that the paraders themselves are giving up their rights as spectators to become performers, and that

the show-business rules for performers must apply: They arrive in plenty of time, they handle their own costuming and makeup, and the show must go on, rain or shine.

Each unit in the parade is numbered and assigned its place on a schedule, which also describes the type of unit and details it's spacing. Generally, several open spaces are left in each division schedule—numbers are listed but not assigned. These are left open for any last-minute entries that must be slipped into the parade formation, and it is much easier to make prior: allowance for them than to attempt to juggle a schedule to make room. These open spaces are closed up, if not filled by latecomers, when the parade gets under way. Each unit is advised of the space it should maintain ahead of it; the unit behind will see to the following space. Each is instructed in what to do should a halt occur up front. It is permissible to close up space somewhat, but not entirely, and the set spacing should be resumed when the parade is progressing again. The wardrobe unit, at the start, should see to it that last minute costume changes are made to suit any weather developments that may come up. No costume changes should be permitted en route.

There are generally three or four warning signals before the start of the parade. Aerial alarms, which deliver sharp, loud blasts, have been found practical for this purpose. In other events, buglers sound the necessary warnings. One alarm may be set off an hour before the start; it serves to warn floats approaching the marshaling area to get in place. Others may be sounded at a half hour, fifteen minutes, and five minutes before the start. A cluster of explosions, or a trumpeted fanfare, signals the start.

Marshaling Procedure

It might be well to step back a bit in time here, to the deliberations of the route committee. The committee should not neglect the item of parade insurance. The parade organization should subscribe to liability insurance covering not only the participants but also the audience. The cost is reasonable compared to damages, which might be assessed in case of accident. I usually suggest, too, that individual float sponsors insure their own parade productions. Obtaining an endorsement on their general liability policies covering the operation of the float also can usually do this. Parade accidents seldom occur; but they have been known, and it's best to be prepared.

Much the same procedure for parade operation pertains as well to a night event, except that it's somewhat more complicated. Special lighting along the route may be installed, to offset the varying levels of illumination coming from the individual floats. Sometimes a well-lighted night parade is more effective if the general level of street illumination is kept low. In this case even the marchers may be equipped with batteries and lights. Spacing in the night parade should be less. The effect of grandeur is obtained from the light, rather than from the spread of the line of march. Too much spacing may produce dark gaps in an illuminated parade.

The parade-marshaling site should be well lighted, as should the dispersal area. Starting is much the same as for a day parade, but there may be changes in the order of formation, the better to place the parade highlights. The parade committee, before setting the night formation, should inspect floats by night as well as by day. Dispersal may be complicated by darkness and reduced speed in getting units away from the breakup point. These conditions vary with different

cities; the challenges offered by street layout and space availability are as varied as the styles of floats and other parade units.

You've had your parade. It has cost a good deal of money, it has taken a lot of work, and there have been troubles and emergencies. But in general it has gone off well, and you're credited with a fine show.

You may not have realized until now that the audience you have pleased is the largest ordinarily gathered for any public event.

Rare is the theater that will accommodate five thousand people. An outstanding baseball game may draw twenty-five thousand.

A Rose Bowl football game may have more than one hundred thousand people in the stands. But you have played, quite possibly, to a half million people. That realization is part of the payoff for your efforts.

To summarize:

Set up your parade organization, with one Chair, and committees to see to the details.

Impose a limit on the size of your parade, and set your date many months in advance. Make it known to possible float sponsors, band organizations, marching groups, and so on.

Check your entries carefully, to avoid duplication and to limit your formation to the best possible candidates.

Alert the offstage crews—police, firemen, service men and so on—and see that they're well briefed.

Have all the details diagramed and scheduled so that division marshals and all under them know exactly what to do.

Have the route carefully selected and well decorated.

Pay special attention to marshaling and dispersal areas, and see that they will be kept clear of crowds.

Carefully plan crowd handling. Protect yourself with insurance.

Run your parade & accept the applause.

Presented By: Victory Corps
Email: victorycorps@weber.com

Parade Rules and Guidelines

As with most things in life, there are rules and guidelines to follow. Parades are no different. Even though a parade is a fun celebration, there should be rules and guidelines set forth for all parade participants ensure they present themselves in a entertaining way and most of all to ensure safety.

Every parade is different as to the guidelines presented to entries based on the type of parade. Sometimes, selected guidelines for parade participants are based on laws of the local or state governments. Did you know some states do not allow a parade to begin before 12 noon on a Sunday? Or, you cannot carry a sign on a wooden post because it is considered a weapon? Many cities have certain guidelines also and should be looked into when creating parade guidelines. In general, guidelines are created by the organizing committee of the parade.

Many parades include general rules and guidelines of the parade with invitations and applications mailed. This gives the potential

entry an idea on what the parade organizers are looking for in an entry for their parade. Here are a sampling of general rules and guidelines.

Entry Selection:

All parade entries are by invitation only and subject to approval by the Parade Organization. All entries are selected on their entertainment value, uniqueness, size, and appearance. All units should adapt the parade theme in their entry. Units such as "everyday" type vehicles, groups of people walking, etc. will not be considered. The Parade **will not** be used as a platform for special interests.

Types of Entries Considered For the Parade

- ★ ***Marching Musical Units*** – School Bands, Drum Corps, Independent Bands, etc.
- ★ ***Floats*** – Creatively built and decorated moving vehicle. Professional and amateur built floats accepted.
- ★ ***Specialty*** – Drill and Dance Teams, Clowns, Balloons, Antique/Specialty Vehicles.
- ★ ***Equestrian*** – Equestrian Teams, Horse Drawn Carriages.
- ★ ***Special Guests*** – Invited Guests, Dignitaries, Celebrities.

Marching Musical Units: Marching musical units are requested to perform the 1.5 mile parade route. Unit members are required to be in uniform. Most units will be judged by professional judges.

Equestrian/Animal Units: It is preferred that the unit consist of five or more participants. The participants must have control of their animals at all times. Equestrian riders should be at least 10 years of age and accompanied by an adult trainer. Any animal deemed unsafe in the parade will be removed. All animal units must provide their own "clean-up" crew and equipment to follow their unit in the parade.

Floats: Floats must be a fully decorated trailer that is self propelled or pulled by a tow vehicle. It is strongly encouraged that the tow vehicle also be covered, decorated and incorporated into the float theme. An artist rendition, sketch, drawing or pictures of the proposed float entry must be submitted with the parade application. Size dimensions of the float must also be included on the application form. Floats should not exceed 55 feet in length, including the tow vehicle, or more than 14 feet in height or width. Any float over these size requirements must receive written permission from the parade staff. Tractor trailer trucks are not accepted to be used as a float. Float applicants must follow the "Parade Float Participants Manual and Guidelines." All float entries will be judged prior to the start of the parade.

Specialty Units: Drill, Dance or Baton teams must consist of 10 members or more to be considered. Units will be considered on their entertainment value.

Entries requiring vehicles to carry sound systems must notify parade organizers on the application. The type of vehicle must be listed for approval by parade organizers. Decorated carts or vehicles are required.

Vehicles: Vehicles considered for entry must be antique or unique. Commercial

business vehicles such as vans, tankers, farm machinery, tractor trailers and other large vehicles are not allowed due to liability and safety concerns. Vehicles permitted in the parade will be restricted in numbers. **No** commercial or private vehicles are allowed in the parade without prior written approval by the parade staff. The blowing of sirens or vehicle horns in the parade is **prohibited**.

Special Guests: Special Guests are by invitation only. They may consist of local, regional and state representatives currently in office or local, regional, national celebrities or notables.

Forward Motion Parade:: All entries are required to maintain a continuous forward motion during the parade. Parade officials may change pace or stop forward motion to maintain suitable space between entries. All marching units must remain in a uniform formation throughout the parade.

Participant Age Restrictions: Walking participants must be at least nine years old or older. There must be a least one adult escort for every six children under the age of 13 years. Young children riding on a float must have adult supervision on and around the float. Equestrian riders must be at least 12 years old, able to control the horse in crowded situations and have adult supervision.

***Unit Attire*: All participants**, including unit members, escorts, and staff must be in uniform, costume, holiday dress or color coordinated attire. No participant, escort or staff with the unit will be allowed to march with or carry backpacks, push or carry infant strollers or carriers.

Commercial Business Entries: Commercial entries **must** be a sponsor of the parade. A commercial business entry cannot be used as a "major" advertisement for the sponsoring business. Parade sponsors will receive various incentives based on the level of participation.

Identification Signs: Identification banners are encouraged for entries in the parade, however must conform to size restrictions set forth by the Parade. The listing of telephone numbers, addresses or statements on a banner or sign will **not** be allowed. **No** commercial signs are allowed on any floats, vehicles or marching participants other than that of a parade sponsor. Signs painted on vehicles, that are not parade sponsors, must me covered. Only confirmed parade sponsors and/or organization logos will be permitted.

Cancellation Policy: **The Parade takes place, rain or shine. Only a significant act of nature will cancel the parade, of which all units would be notified.** If, for some unforeseen reason, your unit is not able to participate in the parade after being accepted, you must contact the parade staff, in writing, well in advance of the parade date. Entries that cancel within two weeks of the parade without substantial reasons will jeopardize future invitations. Entries absent on parade day without proper notification may not receive future invitations to the parade for at least a year.

Entry Application Form: The entry application form must be completed and signed with the understanding of the general rules and guidelines. Incomplete entry forms will not be accepted. Entry forms that are improperly completed will be contacted for clarification. Due to space limitations and guidelines, all entries submitted **may not** be accepted. The parade organizers reserve the right to reject any entry at any time and all

decisions are final. All applicants will receive a letter of acceptance or decline. The general rules and guidelines listed are for the safety and quality of the parade. Failure to abide by these rules and guidelines and those presented with the parade information packages, may result in the unit's removal from the parade and jeopardize future invitations.

Some of these General Rules and Guidelines may not be for every parade, but give a idea of the areas to be concerned with when putting on a parade. It is recommended that a representative of the organization entering a unit in the parade should sign that they have read and will abide by the all Rules and Guidelines presented to them in the event there is a discrepancy.

You will notice in the float area of the General Rules and Guidelines, it refers to a separate Rules and Guidelines for floats. Many parades have separate rules and criteria for floats, mainly for the safety of everyone involved. Float is a particular area that local governments may have rules that all parades must follow. Some government rules could include; fire retardant materials used as decorations on floats, hand-holds for the safety of riders, specific fire extinguisher to have on board, height and width restrictions and the list continues. Please check with your local government officials (fire department, police department) on any type of laws or guidelines they may have for your town or city.

Once an entry is selected, they would receive a letter of acceptance prior to the parade would receive a package of information which could include the entries staging location, maps, and additional parade rules. Those parade rules may repeat some of the items mentioned in the general rules and guidelines and highlight additional information.

Samples of parade day rules could include the list shown in the section **Helpful Forms.**

Parades are to be fun, entertaining, and safe for participants and spectators. Enjoy!

Article provided by:

Ray Pulver
UpBeat Parade Productions
Consulting, Management and Production of Parades and Related Events
5320 Cedar Grove Circle
San Jose, CA 95123
408-226-9680 or email at
Upbeatparades@aol.com

UpBeat Parade Productions is a production company specializing in parade consulting, management and coordination. Ray Pulver has more than 20 years experience with parade management with all types of parades from small hometown and ethnic to regionally and nationally televised. In addition to parades, UpBeat can provide float building workshops, float building, consultation and production of parade related events such as marching band shows, drum corps shows and festivals.

Pick Your Entries Carefully

Whether your parade is a new event or has a long history in your community, each year you will be challenged with the search for new and interesting parade elements. This search should include the answers to a number of questions:

1. How long do I want my parade to be? How long should it take to pass any given point along the line of march?

2. What elements relate specifically to my theme?

3. Do I want to involve the community through clubs or school participation?

4. What is my budget? Can I afford to either pay groups to come or provide housing or other potential barter options?

5. Is there enough time to establish community project involvement?

6. Will I be competing with other events for entries on the same day? What can I offer that they can't?

Many parade budgets are limited and underwriting costs for entries isn't possible. It is important to share this information with potential participants early on to avoid misunderstandings.

Homework is something we all planned to leave behind when we left school. The reality is, "homework" is needed on a continuing basis to learn what's out there.

Visit other events, attend marching band competitions, keep up with local entertainment schedules, horse show circuits, and read local, regional and national publications to stay aware of potential parade elements.

A new movie opening in your community close to the date of your parade could lead to tie-ins with local merchants who would benefit from your event's exposure.

Or, a visit by the Royal Lipizzan Horses to a nearby arena might be negotiated into an appearance in your parade.

Developing community group participation is an excellent way to involve a wide variety of neighbors. With enough advance planning, school groups can use your theme to develop entries. A small donation toward supplies and a large amount of encouragement from teachers can generate some truly innovative ways for young people to become involved. The same holds true for senior citizen's groups or church organizations.

Membership in IFA also gives you access to a great number of resources. As a member, you can reach out to similar events anywhere in the country and the world to find a variety of parade elements.

It is also possible to cooperate with other event producers to share the cost of specific groups who would commit to several consecutive appearances. This is a particularly good way to learn about marching bands from specific regions.

Give yourself time to do the homework and plan what you want in your event. Many parades become tired because planners remember about six weeks out that they need to get their act together and find entries. This is a sure-fire way to hurt your event.

People love parades and will come out for them over and over again. Don't they deserve the best?

When selecting entries, don't be afraid to be demanding. Set standards. Say "no" when applicants don't meet your standards.

Give yourself time to evaluate each entry to determine if they meet your criteria. Take the time to write down what you will and won't

accept in your event. Share these guidelines with potential entries:

By saying "no" to groups who don't measure up, you are telling them to improve the quality of what they are offering. In many cases you'll be surprised at how that challenge is met the next time they apply.

Quality bands and other performing groups look for well-run events and appreciate your efforts to make their participation a positive experience. This does not mean spending a lot of money. It does mean having your act together so you can provide them with the necessary information to ensure things run smoothly.

Types of parade entries vary greatly. Depending upon your event, entries can include:

- ★ Floats
- ★ Balloons
- ★ Color Guards
- ★ Livestock
- ★ Ethnic Groups
- ★ Fire Department
- ★ Unicyclists
- ★ Tricyclists
- ★ Celebrities
- ★ Visiting Royalty
- ★ Veteran's Groups
- ★ Bands
- ★ Clowns
- ★ Vintage Autos
- ★ Farm, other equip.
- ★ Equestrian Elements
- ★ Police Dept.
- ★ Bicyclists Jugglers
- ★ Festival Queens
- ★ Military Groups
- ★ Novelty Acts

The list could go on and on. You must decide whether or not to limit your event to a specific format or to be more flexible.

A local volunteer fire association parade contains drill teams, band and drum corps, comedy teams, and fire companies, departments or auxiliaries. The Pasadena Tournament of Roses Parade, on the other hand, includes only floats, bands, and equestrians.

A key factor in planning your show is balance. You shouldn't have floats of similar size, shape and color near each other. Bands of similar styles should also be separated.

Become thoroughly familiar with each element when you accept the entry. The auxiliary fire department from the next town may send a contingent to march, but they may also send their oldest and newest equipment for display, as well as a team of trained dalmations. You should know this in advance. You will not relish surprises on the day of your event.

When possible, visit with the groups you have accepted, study the plans for float designs, and meet with the other entrants in the parade.

Committees or designated individuals should follow up on specific areas of responsibility. However your organization is set up, you must be able to know what tools you have to work with when planning your show.

Presented By Valerie Lagauskas

Synergistic Concepts, Inc.
Bala Cynwyd, PA
Tel: 215-567-2621
Fax215-567-4099

Email: lagval@aol.com

This article has been reprinted from "Parades" with permission of The International Festival & Events Association. Many more informative articles about parades are available in this publication. Please contact IFEA for information.

About The Author

Valerie Lagauskas is president and Founder of Synergistic Concepts, Inc., a special events production company with emphasis on creating parades, festivals, firework shows and other community-oriented spectacles.

Committed to the development of events that reflect the quality of life in the communities she serves, Valerie brings together teams of professionals to share their experience with local event planners. Clients of Synergistic Concepts include Capital Cities/BC's WPKI-TV for the Philadelphia Thanksgiving Day Parade, t the City of Philadelphia for The Great American Liberty Celebration on July 4th; City of Baltimore for the Columbus Day Parade; The Maryland Preakness Celebration; Baltimore Operation Sail for "From The Sea" Boat Parade, and the Baltimore Orioles for the Orioles Opening Week Parade in honor of the grand opening of their new stadium in Baltimore.

Formerly Manager of Macy's Thanksgiving Day Parade in New York, Lagauskas also produced and directed, "The World's largest games, " a major street festival for children in New York.

Lagauskas is the author of "Parades, How to Plan, Promote and Stage Them," published by Sterling Publishing, 1982. She has taught Retail Advertising and Career Orientation at the Fashion Institute of Technology in New York and has participated in the NRMA National Convention as a panelist on Community Marketing.

On the Board of Directors of the International Festivals Association (IFA), and as a leader in the industry, Lagauskas has lectured at IFA conventions and seminars all over the country and at the International Events Group (IEG) annual conference in Chicago.

12 Steps to Sponsorship Success

Selling sponsorships is not a matter of buying a mailing list of potential buyers, writing a direct mail letter, putting together a "package", mailing everything out and waiting for the telephone to ring with people offering you money. It's a nice dream but the reality is much more complicated (and time consuming) than that.
Before getting started you should have a definition of sponsorship. The following definition is by no means perfect; however, there are some choice words that help you purse your sponsorship sales with a good foundation.

Sponsorship is an investment, in cash or in kind, in return for access to exploitable business potential associated with an event or highly publicized entity.

The key words in this definition are "investment", "access to", and "exploitable". First, investment. By constantly looking at

sponsorship as an investment opportunity, where there is a viable payback, no longer are you talking to someone about a payment of cash or money. Rather, use the word **investment** which automatically implies that value will be returned to the investor. Second, **access to** which means they ability to be associated with a particular offering (event, sport, festival, fair ... you name it). Lastly, exploitable, a positive word which means "to take the greatest advantage of" the relationship. In other words, allowing the sponsor to make the greatest use of their investment and capitalize on their relationship.

With this definition in mind you can now go forward and take the 12 steps to sponsorship success. If you take these basic 12 steps you will be assured of greater success in your sponsorship endeavors. These basic steps, and the components that comprise each of them, are covered in depth in this book. References are made throughout this chapter to the specific chapters that go into the specific references in detail.

Step 1 ... Take inventory

What are you selling? You have a number of elements in your event that have value to the sponsor. The include, but are not restricted to, the following:

- ★ Radio, TV and print partners
- ★ Retail outlet
- ★ Collateral material ... posters, flyers, brochures
- ★ Banners
- ★ Tickets: quantity for giving to sponsor plus ticket backs for redemption
- ★ VIP seating
- ★ VIP parking
- ★ Hospitality ... for the trade, for customers, for employees
- ★ On-site banner exposure
- ★ Booth
- ★ Audio announcements
- ★ Payroll stuffers
- ★ Billboards
- ★ Product sales/product displays
- ★ Celebrity appearances/interviews
- ★ Internet exposure

And, you can think of more. Look at your event as a store and take inventory of the many things that will have value to your sponsors, whether it be for the marketing value or hospitality value. Take your time in making up this list ... time spent at the beginning will be rewarded by more effective sponsorships when you get into the selling process.

Step 2 ...Develop your media and retail partners

Next, approach your media and retail partners. They should be treated the same way as all other sponsors, with the same rights and benefits. In fact, after taking your inventory steps 2 and 3 are done almost simultaneously as you must have something to give to your potential media and retail partners that describes the sponsorship. Briefly, here's what is important to these two key partners.

Your event offers the media an opportunity to increase their non traditional revenue (NTR). You have an audience, sampling opportunities, sales opportunities and multiple media exposure that the media people can offer to their own advertisers. Many times an advertiser asks for additional merchandising opportunities from the media. Your event offers them that opportunity. You can let them sell a sponsorship for you in

return for the air time or print coverage. Just make sure it is always coordinated through you so they are not approaching your sponsors and you are not approaching their advertisers. From radio and TV you want air time that can then be included in your sponsorship offerings. From print you want ad space and/or an advertorial (a special section). In both instances you are getting valuable media to include in your sponsorship offerings to your potential sponsors.

Treat your media just like your other sponsors. Give them the attendant benefits that go with the value of their sponsorship. When the event is over, they should provide you with proof of performance (radio and TV an affidavit of performance; print should give you tear sheets) and, conversely, you should provide them with a post event report

Retail

A retail partner ... supermarket, drugstore, fast food outlet ... offer you some additional benefits that can be passed on to your sponsors. And, with a retail outlet, you can approach manufacturers and offer them some of these benefits. For example, once you have a retail partners the following opportunities exist:

End cap or aisle displays
Register tape promotions
In-store displays
Store audio announcements
Inclusion in weekly flyers
Weekly advertising
Cross-promotion opportunities
Bag stuffers
Place mats (fast food outlets)
Shopping bags

Again, as with the media, even though this might be straight barter, treat the retail outlet as you would a paying sponsor. They are providing you with terrific benefits that can be passed on to your other sponsors, a tremendous value in attracting retail products. And, as with the media, have them provide you with documentation of their support ... samples of bags, flyers, inserts, etc. In return, you will provide them with a post-event report, documenting the benefits they received and the value of those benefits.

Step 3 ... Develop your sponsorship offerings

Now you can put together the various components of your sponsorship offerings so you are prepared to offer valuable sponsorships. Try to avoid too many levels and too "cutesy" headings. Don't use gold, silver and bronze. Don't use industry-specific terms your buyer might not understand. (If the buyer doesn't understand the words they probably won't take a look at the offering!). Simply, you can have title, presenting, associate, product specific and event specific categories. They are easy to understand and easy to sell. Of course, title is the most expensive and most effective. Think of the Volvo Tennis Classic or the Virginia Slims Tennis Classic. The minute the name of your event is "married" to the sponsor's name the media have to give the whole title. Great exposure for your title sponsor.

The first step in preparing for your initial sponsor contact is to prepare a one page fact sheet that clearly and succinctly outlines the basics of your event (the who, what, where, when of your property) and highlights the various benefits of being associated with that event (radio, TV, print, on-site, etc.).

Step 4 ... Research your sponsors

Learn about your potential sponsors. Get on the Internet, read the annual reports, do a data search on the company, use the Team Marketing Report sourcebook ... find out what the companies are currently sponsoring, what their branding strategies are, what their business objectives are.

Become an expert on your prospects ... the more you know abut them the better prepared you will be for their questions and the easier it will be for you to craft a sponsorship offering that meets their specific needs.

Step 5 ... Do initial sponsor contact

Then, pick up the telephone. Try to reach the proper person . When you reach the correct person, don't launch right into a sales pitch. Rather, ask them several questions about their business that will indicate to you whether or not they are a viable sponsor for you project. (If you've done your homework, the answer will be "yes" and you can continue.)

Step 6 ... Go for the appointment

Once you have had a brief discussion, try to get the appointment. If they say, "Send me a 'package'" respond with "I'll do even better than that. I've prepared a succinct one page Fact Sheet that highlights the various marketing and promotion components of my event. May I fax it to you?". Then, ask for the fax number, send it to them right away and then call back shortly to make sure they received it. If they have received it go for the appointment. Explain that the fact sheet is merely a one dimensional outline that cannot begin to describe the total event and you would like to meet with them, at their convenience, to show them pictures, previous press coverage, a video ... whatever you have. Follow the basic sales techniques of choices .. Monday or Friday, morning of afternoon. Don't give them a chance to say they can't see you.

Step 7 ... Be creative

Once in front of the sponsor, be prepared. Demonstrate your knowledge of their business by offering a sponsorship that meets their specific needs. Help them come u with a new and unique way to enhance their sponsorship beyond the event. For example, if it's a pet store, come up with a contest that involves the customers and their pets. Or, devise a contest where people have to fill out an entry form to win something. Think about hospitality opportunities ... rewards for leading salespeople, special customer rewards, incentives for the trade. Be prepared to offer these ideas, and more, to help the sponsor understand how this sponsorship offers him/her great benefit.

The moment of truth ... you have to ask for the sale. You can't wait for the sponsor to offer; rather you have to ask "Will we be working together on this project?" or something like that. You will have to develop your own closing questions. Hopefully, as you went through the sales process, you determined their needs and developed a program to meet those needs. And, you certainly should have done enough questioning to determine what their level of participation would be. Keep in mind that different personality styles buy differently which means you must select from a variety of closing techniques to ensure the right "fit" with the different personalities.

As with any sale, once you have concluded the sale follow up with a detailed contract that outlines each parties obligations. A handshake is nice but if the various elements aren't spelled out there can be a bad case of "but you said" when people sometimes hear what they ***want*** to hear, not necessarily what was spoken. Make sure you include a payment schedule that ensures you receive all your money before the event. If not, you could suffer from the "call girl principle".

Step 9 ... Keep the sponsor in the loop

Once you have gone through the sales process you want to keep your sponsor involved up to, and through, your event. See if their public relations department will put out a press release on their involvement.

Show them collateral as it is being developed to make sure they are happy with their logo placement. (With fax and e-mail this is now a very simple process.) Make sure they are keep up-to-date on new sponsors, new activities ... whatever is happening. The more you involve them in the process the more involved (and committed) they become.

Step 10 ... Involve the sponsor in the event

Make sure your sponsor is involved in the event. Don't let a sponsor hand you a check and say "Let me know what happens".
You are doomed to failure. Get them to participate by being on site ... walk around with them ... discuss their various banner locations, the quality of the audience, the lines at their booth, whatever is appropriate to their participation.

Step 11 ... Provide sponsors with a post-event report

There's a very old saying regarding presentations: "Tell them what you are going to tell them, tell them, then tell them what you told them." The post-event report is the last segment of this saying. Provide your sponsors with complete documentation of their participation. This should include copies of all collateral material, affidavit of performance from your radio and TV partners, tear sheets, retail brochures, tickets, banners, press stories... whatever has their company name and/or logo prominently mentioned or displayed. This should all be included in a kit, with a written post-event report that lists the valuation of the various components, and presented to the sponsor with a certificate of appreciation for their participation.

Step 12 ... Renew for next year

Now, if you've followed these 12 steps carefully renewal is easy. In fact, you can get your sponsor to give you a verbal renewal during your event (if it is going well) and certainly after you have provide that sponsor with a post-event report that documents the value of all the marketing components he received. You should try for a three to one return on their investment. In many instances it will be even more than that if you have delivered as promised!

Conclusion

Selling isn't easy; however, if you follow these 12 steps it will be easier because you will have done your homework and will be prepared to discuss the sponsorship intelligently. These 12 steps make selling fun!

Presented By Sylvia Allen
Allen Consultin
Holmdel, NJ 55430
Tel: 1-732-946-2711
Email: sylvia@allenconsulting.com
http://www.allenconsulting.com

Volunteers

- ★ The Care and Feeding of Special Events Volunteers
- ★ Recruiting and retaining volunteers
- ★ Why do you need them?
- ★ What do you need them to do?
- ★ What will they need to be able to do?
- ★ How will you train them?
- ★ How will you supervise them?
- ★ How will you recognize and reward them?
- ★ Tangibles
- ★
- ★ Shirts, pins, coupons, hospitality, etc.

- ★ Intangibles
- ★ Thanks, recognition (LOA) from civic and community leaders, etc.

Why would you possibly need volunteers for your event? Why not just handle everything with paid staff? These are obvious questions, of course. Few, if any, events have adequate staff to create, plan, administer and execute all of the factors that are required to stage a successful parade. As in many aspects of the Special Events community, numbers of people are needed. In the vast majority of instances, these are people who are willing to give up their time without compensation to make a parade happen. Finding enough of the right sort of persons, training them and treating them such that they want to return is a significant, but not insurmountable, task.

Following a few basic steps will help make this task much more manageable. First, and perhaps most importantly, define what you need them to do. The operative word here is "define". While most experienced parade planners have a good overall concept of what is needed, not all levels of event management will. We've seen what can happen as staff come and go, corporate knowledge is lost, and we re-invent the wheel from event to event. A few moments spent in actually defining the volunteers' tasks and writing them down is time very well spent.

It helps to separate tasks, and sometimes to group like tasks together. Human Resources specialists (PHRs and SPHRs) have experience in task definition, and can be a boon to the event planner. Ask them politely, and you'll find many willing to help. When defining the tasks, be as specific as possible. You may know what you mean by "Parade Marshal", but that isn't nearly as helpful to a newcomer as something like "Parade Marshal – Accompanies parade units from assembly point through the parade route to the dispersal area. Ensures unit keeps parade pace, assists in keeping spectators out of the parade path, enforces safety measures." Each event has its specific needs, but you get the idea.

Once the task has been defined, spend a few moments and envision the perfect person for that task. Key on the specific (again, that word) talents they would need to effectively do that job. Are there mobility requirements (will the volunteer have to walk distances)? How about lifting minimum weights? Will the position require them to interact with other people and the public? Is knowledge of certain technical tasks required (do you need them to operate computers, radio equipment, motor vehicles, etc.)? Perhaps you will not find the perfect volunteer, but you will be a lot closer to finding the person who can do the job for you. It helps the event planner seek out the right person, and is much more fair to the volunteer. In many cases, they will not know what you need them to do, so it is up to you to have that definition clearly in mind.

How will you train them? This may sound like a silly question, but it has been demonstrated time after time that initial training, however minimal or extensive, pays off handsomely when it comes time to perform the actual job. You may want to consider a variety of training methods (again, that Human Resources friend can help) that are suited for the task and the volunteer being trained. Be it classroom, on-the-job, mentor, or whatever style works best, a written training plan keeps you focused, and reduces the time you and the volunteer will spend preparing. It also provides the background you will need to line up the appropriate resources (classroom space, equipment and the like).

Once the tasks are well defined, the type of person identified and the training planned, you may now proceed to finding these perfect persons. The good news is that the American society is generally committed to volunteering. The other news is that you may have to do some legwork to find them.

There are, however, some very good sources. The first (and best) is the volunteer cadre you have from previous events. If they are happy with their experience, they are your very best pool and your best advertisers. You can ask them to solicit additional volunteers from among their acquaintances. Beyond that, many cities have volunteer coordinating groups. Again, a quick telephone call or letter might allow you to tap into an existing network for volunteer search. Some of the very best sources are senior citizen groups. Although there are considerations that have to be addressed (primarily physical demands), mature Americans are some of the most enthusiastic, dedicated and eager participants available. In addition, retirees may be able to devote time beyond that available from the 9-to-5 crowd. Other excellent areas for potential volunteers are schools (some high schools are including community service requirements for graduation), fraternal organizations, military units, churches, businesses and governmental organizations. Sometimes it is a simple as a telephone call or brief visit, and a relationship can be established.

Great, then! You've done all the planning, training, solicitation and preparation. You're ready to step off in what is sure to be a parade to be remembered. Well, almost. Your eager volunteers might be milling about, anxious to begin, but you certainly will not be able to supervise everything they do, will you? Part of the planning process needs to include supervision during the event. Regardless of how extensive your preparation was, things are bound to crop up the day of your parade, and you'll want to have trained, identified supervisors on site, knowledgeable of what needs to be done, who is there to do it, and how it should be accomplished. These are volunteers, too, but you'll want to be certain there are adequate numbers of them for the numbers of volunteers. There is no magical equation, but in many cases one supervisor for 10 – 15 volunteers works well. Other elements to keep in mind might be: Do your supervisors have working communications means with you and each other? Are they versed in backup plans, safety and incident handling procedures? Have they met their volunteers <u>before</u> the event? These small details, attended to before the event, will save you many potential headaches.

So your parade came off without a flaw. You did everything right, all of your volunteers showed up and performed beautifully, and the entire community is singing your praises. You've earned the right to sit back contentedly and bask in their compliments.

Before you do, though, there is the not-so-small matter of acknowledging the volunteers' contributions. Think of it this way – how much would it have cost to hire all the people you needed to administer your parade? At the very least, your volunteers saved you that much money. More practically, though, is the certainty that your parade probably would not have occurred without their donation of time, talent, and in some cases, money. How do you adequately acknowledge this?

In a survey following the 1998 Virginia Beach Neptune Festival, the overwhelming majority of volunteers indicated they are part of the event because they feel identified with a major community Festival. Being made to feel part of this celebration shows them they were appreciated, that their efforts were seen and

noted, and that they intend to return. There are few melodies sweeter to the ear of an event planner than the latter. Building that cadre of experienced, enthusiastic volunteers makes each successive event easier and easier.

There are essentially two ways of acknowledging your volunteers – the tangible and the intangible. You will need to carefully examine both areas and incorporate those elements that are appropriate to your volunteers, your event, and your budget. Some thoughts on doing that:

Build into your budget a line item for volunteer appreciation items. T-shirts, commemorative pins, volunteer hospitality suites and redemptive coupons are just a few of the possibilities. Some events have an established program of tracking each volunteer, and (publicly where feasible) acknowledging them. An appreciation pin at the 5-year, 10-year, 20-year and 25-year marks is a reasonably inexpensive way of saying "Thank You" and keeping them coming back. The Virginia Beach Neptune Festival, for one example, hosts a "Volunteer Appreciation Party" for all their volunteers. Set in a scenic oceanfront park, volunteers are treated to barbecue, beverages and live music, while festival executives and community VIPs get a chance to mingle and personally thank them for their efforts. Corporate sponsors are frequently available to underwrite these elements of your event, as there are economic and civic advantages in being associated with you and your volunteers.

Beyond that, however, there are equally important intangibles. **Do not overlook the importance of saying "thank you."**

This sounds so basic as to be silly, but we sometimes overlook the obvious. You, as the event planner, should miss no opportunity to thank each of your volunteers (by name, if you possibly can) for their contribution. If there are important community persons associated with your event, enlist them to do the same. It is common courtesy, anyway, but is the first and most important thing you can do. After the event, write them a note. The numbers might make it a little challenging, but there are ways to comfortably address this question, too. The point is to convey, from you to the volunteer, that what they did was valuable and appreciated. If you can, a hand-written note is the best, but a cleanly typed (do NOT photocopy an original) letter is acceptable. Newspaper articles with group photographs are excellent ways of acknowledging your volunteers (and might help bring in others). Need a hook for your article? National averages suggest that an hour of volunteer's time is worth $14.30. Multiply that times the number of volunteer hours contributed, and you have a significant dollar amount to cite.

If your volunteers come in groups (from schools, churches, businesses, the military, etc.) a letter to the principal, president, pastor or commanding officer is a MUST. Name their people by name and thank them for their participation. In many instances, this is then turned around in their own circle, which is appealing to all of us.

In short, there is no lack of skilled, enthusiastic people eager to support your parade. A little careful planning, some creative solicitation, training, assignment, supervision and thanks and you have developed a group that will look forward to working with you again and again. Have fun!

Presented Kelley Bimson & John Ickes
Virginia Beach , VA
Tel: 1-800-328-6120

About the authors:

Kelley Bimson is Special Events Administrator for the Virginia Beach Neptune Festival. The Festival is the annual community celebration in Virginia Beach, Virginia, attracting more than 750,000 people to activities throughout September, culminating in the Neptune Festival Grand Parade along Atlantic Avenue in that oceanfront city. Among her tasks she is the Volunteer Coordinator, responsible for the more than 1200 volunteers who make this festival so special.

John Ickes is the Director of Operations and Logistics for the Neptune Festival. A former Volunteer Coordinator for the festival, he has a deep affection and appreciation for the hundreds who take part in planning, administering and presenting this event.

How & Where to Get Marching Bands

What's a parade without marching bands? Unfortunately, more and more parades are finding out, or at least are finding out what a parade is like, with very little in the way of marching bands.

There are good reasons why some parades have more bands than they can use, while others are having trouble finding any. Understanding the "reasons" will help you to be one of those who have plenty of music for your parade.

If your parade is televised nationally, during a holiday period, has a nation al reputation for excellence, provides travel money, is in a great location, has great prizes, and you have the time to call or visit each band personally, then you probably don't need to read any further. Matter of fact, then I'd like to work for you'

Most of us don't have all of these things, so we have to capitalize on the ones that we do have, and compensate for the ones that we don't.

For the most part, there are some things that you may not be able to have any control over, such as location, time of year, etc. If you are absolutely "stuck" with these things, then let's look at the things that you can affect.

Understanding the "Beast"

A marching band is not just one entity. It is a director, staff, dozens of musicians, and if we are talking high school bands, it is also parents, principals, and school boards, equipment and money. Each has their own wants and needs, and our success will depend on how close we come to satisfying these. For the most part, high school band directors don't spend a lot of time working on parade music or parade marching skills. Their interests tend towards concert, jazz and field band productions.

A good many people think that if a band knows how to march and play music, then they are automatically good at parades. Not so. To be good as a parade band, a group must practice this particular skill. Who makes time in their very busy schedules for this? The answer is "not many."

A good many people think that if a band knows how to march and play music, then they are automatically good at parades. Not so. To be good as a parade band, a group must practice this particular skill. Who makes time in their very busy schedules for this? The answer is "not many."

A general rule is that the better a band, the less likely they will be interested in devoting time to parade practice. One of the reasons that they are good at concert and field band is because of the time they spend on these skills, and to take time out for parade practice is an imposition. So, if you want the very best bands in your parade, most likely you will have to offer something else in addition to just the "thrill of the parade." For some it might be the quality of the trip (Florida, Hawaii, etc.), or additional contests (concert, jazz, field), or national exposure, or the quality of the bands in competition, or money. The package that you offer is going to be more important than just the parade.

Something you might also want to consider is going after the "up-and-coming" bands who have not developed the skills necessary to win a concert or field competition.

Many times, these directors view parades as a way to gain exposure for and enhance the reputation of their bands, and at the same time, reach for a prize that is within their grasp. This is the old "big fish in a small pond" routine. There are many directors who hardly ever place in a contest. These are the ones that are easier to get for a parade. For their students, a parade is a "big deal," while the better bands view it as a "duty gig."

Worried about the quality of music from these bands? Well, it is not going to be the same, but how many will notice? A very prominent TV producer once mentioned that he couldn't see much difference from the national bands in our parade, and the local bands in other parades. As a band director, I was appalled, but maybe he is typical of the general parade audience. To him, what was important was the fact that there were lots of marching bands, not how good they were. His battle cry was, " Give me loud, and give me many' and we've got a parade. "

The timing of your parade is also very important. Does it conflict with football games, or Scholastic Aptitude Testing, or holidays? Is it during marching season, or are you trying to pull bands out of concert season?

Now, let's talk about judging a parade. This is pretty important to most band directors. After all, if they are going to ask the students to work hard getting good for this, then they would like some recognition for having done it. If it is not judged, then why spend extra time getting good?

Speaking of bands playing, how do you insure that the bands will play all along the route, instead of just for the judges. We telI them that they are required to play " X" amount of times, and where, and that failure to do so will result in a penalty. We let them worry about how we will know if they do it or not (actually, we do know)'

While parade judging is important, GOOD JUDGING is critical! Many a director will tell you about the time that they got beaten by some inferior band because the judges wouldn't know "good" if they tripped over it. Well, maybe so, maybe not. At least if you have outstanding judges, a director will have to think twice before blaming the outcome on poor judging.

While you can judge a parade with as little as three people, it is better to have six. This will include two for music, two for marching, and two for general effect. For the most part, they will each have about one-third of a l 00 point scale (averaging each category), giving slightly more weight to music and marching. We use a 100-yard judging area in towers: one music, one marching, and two general effect, and two are on the street.

Make sure that you give each director a "recap sheet" at the end (everyone's scores), so that they can see how they did in relationship to the others. For those who don't place, this is their only reward; how they did comparatively.

Last, but not least, remember that band directors have egos, too (hard to believe, isn't it). When you invite them to participate, flatter them as much as you can. Talk about their "famed band," and what an honor it would be to have their group in your parade. Tell them that the whole world wants to see their band coming down your street.

This works a whole lot better than telling them why they "have to" or "should be' in your parade, and it makes it a lot easier for the director to sell the idea to his or her students, administration and parents.

Details, details, details

Let's talk about some things that can make a difference on how band directors perceive your parade. For instance, are you using the best parade route available to you? I can remember marching in parades where we were "playing for the cows," or marching through areas that looked like the slums. Playing in downtown areas with buildings on both sides (great acoustics) is a lot more fun than playing out in the open. A good idea is to keep your parade route short enough that it always looks crowded.

Creature comforts are also important. Is the assembly area easy to get to, and is it well marked? Do you provide good maps, good parade instructions, and a guide to help the band? No band likes to be stuck in traffic for hours, or have to wait in the assembly area for two or three hours before the parade.

Is there good crowd control during the parade? Talk to me sometime about the parades in which our girls were attacked by street bums, or how people were crossing the street right through the band, or the many times we were squirted with water or silly string. How about the parades where the TV cameras were in the middle of the band as they were being judged! Forget crowd control – how about horse control? Do you clean up after those critters?

What happens at the end of the parade? Are there restrooms, refreshments, and medical help available? Will the band buses be there, or does the band have to walk back to the beginning of the parade?

How are the awards given out? There is no glory in finding out that your band won a contest after everyone has gone home. These things may not have much affect on getting a band to come to you parade, but they will have an affect on whether or not they ever return.

Again, having enough bands for a parade means in part keeping the ones which do participate happy enough to come back, and having them pass along that feeling to their colleagues so that they will also participate.

Where To Find Bands

When most people think about marching bands, they think high school or college. Great – go after them. But, what can you do if they are not available?

The military is a good source of music. Is there a training center or a base in your area? Many times, you can get their band just for the asking. They do it as a way of recruiting.

How about drum and bugle corps? Their season is usually May through August you may get them earlier or later if you're lucky), and most likely, you will have to pay for them. But, if you can get them, they are well worth it!

Other places to look would include the Shriners, VFW, Salvation Army, Scottish bagpipe bands, fife and /or drum corps, and clown bands. If all else fails, how about putting a jazz/rock/Dixieland or concert band on a float or flatbed? How about a kazoo or wash tub band? How about Mr. Spoons?

Our biggest (and best) band is the Original Second Time Arounders Band, which numbers over 400 members who come together just to do the Festival of States. The criteria for joining is that a person be post-high school age, have an instrument (except for some of the big ones like tubas, drums, etc.), and have some knowledge of how to play it. They practice five times, and perform in three parades, a "stand still" at the field show, and sometimes give a concert at our Coronation Pageant and Ball. They're fantastic, and very popular!

These bands are fairly easy to start. All you need is access to some of the bigger instruments (try your school system or local music store), and a good leader. Of course, you will need a little money for music (unless the school will donate it), and a place to practice. Be a hero – start your own band!

Few directors accept an invitation to march in a parade "just for the pleasure of it." Most do it for "fame, fortune and prestige." If your parade falls short in one area, then make it up in another. Keeping this in mind will help you to have the parade that gets the bands, and if you pay attention to details, they will continue to come back.

Some Helpful Web Sites to Find Bands for Your Parade:

Band Web Ring – http://www.webring.org/cgi-bin/webring?ring=march;list

Bowl Games of America – http://www.heritagefestivals.com

Drum Corps International – http://www.dci.org

Marching.com – http://www.marching.com/

Musicfest Orlando – http://www.musicfestorlando.com

World Of Pageantry – http://www.worldofpeagentry.com

This Article was presented by"

Don Mac Tavish
Executive Director
Musicfest Orlando
771 Kirkman Road, Suite 118
Orlando, FL 32811

Tel. 800-734-0482
Email: info@musicfest.com
Fax. 407-296-8587
http://www.musicfestorlando.com

About the author:

Don MacTavish was the Executive Director of the St. Petersburg Festival of States at the time of this writing. This festival sponsored four major parade competitions each year, attracting many of the top bands in the country.

Prior to his 10 seasons in St. Petersburg, Mr. MacTavish was the band and choral

director in East Lyme, Connecticut. In the 19 years under his direction, the East Lyme band won several district, regional and national championships.

Presently, Don is the Executive Director of MUSICFEST ORLANDO. Hosted at the WALT DISNEY WORLD Resort, this organization produces 15 weekend festivals (March-June) for junior and senior high school bands, choirs, orchestras and auxiliary units. MUSICFEST ORLANDO attracts over 225 schools each year for competition.

Event Insurance

The prime concern of event producers, directors, officers and sponsors is that of liability for those who attend. Although you may have made all possible safety arrangements for the well being of spectators there is always the chance of an unforeseen accident that will require defense and possible payment of damages.

Undertaking your event faces you with possible loss of property, income, liability of others and of life and death. The payment of an insurance premium will allow you to transfer this responsibility to an insurance carrier. And thus you are able to enjoy a peaceful night's sleep.

Risk management is the safeguarding of people, property. assets and public image. The function of risk management is to reduce the risk of loss. This can be done by developing your own event manual in writing with an annual review to include the following:

1. Name of event
   a. Including all insureds to be named on insurance policy
   b. Complete a description of event
   c. Purpose of event
   d. Type of vendors and suppliers
   e. Identify any unique circumstances of event

2. Location
   a. Do a walk through of all sites, facilities and areas to be used or occupied by:
      (1) Event staff
      (2) Participant
      (3) Performers
      (4) Spectators: Consider safety needs of different ages
      (5) Staging areas

3. Crowd Management
   a. Adequate access
   b. Adequate egress
   c. Disability availability
   d. Emergency Action Plan
   e. Medical Facilities
   f. Parking
   g. Proper seating arrangements
   h. Restroom facilities
   i. Security
   j. Traffic flow

4. Cause of Loss - claim
   a. Acts of nature
   b. Inadequate management
   c. Individual errors
   d. Poor planning
   e. Unsafe activities
   f. Unsafe physical conditions
   g. Most losses arise from falls, slips and trips

5. Crowd Control
   a. Identity sources from which losses may occur
   b. Determine what; hazards are to be covered
      (1) Which ones can be self-insured

(2) Which ones can be transferred co others
(3) Which ones can be transferred to an insurance company

c. Do sponsors require coverage or will they provide their own?
d. Develop a written security plan for crowd management and crowd control Consider the following examples for safety and security of your event:
(1) Concerts
(a) Barriers between spectators and performers
(b) Sound and lighting equipment
(c) Special effects material
(d) Stage construction

(2) Parades
(a) Bleacher accidents
(b) Design of float entries
(c) Fire/Police Department requirements
(d) Passenger Safety

Your event should not take place without the benefit of proper insurance coverage. The world is unable cooperate without the security of insurance protection to obtain the broadest possible coverage you should check an agent with the expertise for this class of business you require. Start your discussion as soon as possible, to allow your agent time to obtain most favorable terms and conditions, and to allow you adequate time for review of the proposal offered.

6. In order to obtain a coverage proposal provide your agent with the following information: .
a. Additional insureds to be included such as.
(1) Performers
(2) Sites
(3) Sponsors
(4) Vendors
b. Certificate Of Insurance from vendors & suppliers
c. Copy current/prior insurance coverage
d. Description of events
e. Description of all operations
f. Loss history past five years
g. Number of paid staff and payroll
h. Number of volunteers and Job description
i. Safety activities and security measures
j. Schedule of locations
k. Schedule of Non Owned Hired Vehicles

7. Insurance premiums are usually determined by the following:
a. Admission receipts
b. Facilities to be used
c. Food recipes
d. Number of spectators
e. Prior loss history
f. Security measures
g. Type of events
h. Years at experience

8. Insurance company
a. Should be rated
b. Licensed in your state
(1) Unlicensed companies usually not covered by state insolvency funds

9. Once you have determined the appropriate agent with the proper insurance company we suggest you remain with agency; subject to periodic bids. There are a limited number of companies offering quality protection. Don' t change for price only. Review your coverage carefully. Any research you do will come to nothing if you fail to read and understand coverage you have obtained. Ask questions.

10. Insurance checklist
a. Accident/Disability/Medical
(1) Participants

(2) Performers
(3) Spectators
(4) Volunteers '

b. Adverse weather
c. Crime
(1) Fidelity Bond
(2) Money & Securities
d. Directors and Officers Liability
(1) Entity
(2) Employment Practices Liability
(3) Committees
(4) Volunteers
e. Event Cancellation
(1) Expenses
(2) Profit
f. Extra Expense
g. General Liability
(1) Bodily Injury/Property Damage
(2) Products Liability
(3) Completed Operations
(4) Personal Injury
(5) Advertising Injury
(6) Fire Legal Liability
(7) Third Party Property Damage
(8) Participants
(9) Performers
(10) Fireworks
(11) Volunteers
(12) Occurrence form
(13) Not subject to audit
h. Non Owner/Hired Car Liability
i. Property
(1) Borrowed
(2) Leased
(3) Owned
j. Umbrella Liability
k. Valuable records
l. Workers' Compensation
(1) Mandated by law

11. Certificate of Insurance
a. Have your agent prepare a sample certificate to be used as part of your contract negotiations including the following;
(1) It is understood and agreed liability limit indicated is in full force and 100% applicable to event specified on this certificate at location described.
(2) Cancellation clause to be replaced with the following:
(a) Should any of the policies described on this certificate be cancelled, not renewed, replaced, limits reduced, or rendered void by some action on the part of the named insured, or otherwise altered before the expiration date thereof,. the issuing company will mail thirty days written notice via certified mail to the certificate holder, attention (designate name).
b. Certificate to be obtained from all independent contractors, suppliers, vendors and those performing services for your event.
(1) Coverage to be primary which your name included as Additional Insured so that you will be defended for negligence acts caused by the Named Insured.
(2) Limit of liability to be at least equal to your own limit and not less than $1,000,000.
(3) Obtain certificate at least thirty days in advance of event
(a) Send to your agent to evaluate adequacy of coverage and financial strength of the company licensed in your state.
c. Your agent will issue a Certificate of Insurance on your behalf when requested by you.
(1) Additional Insureds should only be included when required by contract.
(a) Adding names of others to your policy is a sharing of your limit.

This may determine that your limit should be increased.

12. 12 Legal
    a. Contracts
        (1) To be reviewed by your attorney
            (a) Then send to your agent for review by underwriter before being signed.
    b. Releases
        (1) Obtain where possible
13. Hold Harmless Agreements
        (1) Obtain where possible
14. License permit
    a. As required by city, site and facilities
        (1) To be obtained well in advance of event allowing you adequate for compliance
        (2) Insurance requirements to be determined
        (3) Fireworks
            (a) Be sure vendor is in compliance with city requirements

Your agent can be your best professional friend. He or she will make you feel comfortable and help to avoid a possible financial funeral.

Information provided in this article is for illustration purposes only and not intended or represented to be complete.

Marvin S. Kaplan is an Arts & Entertainment agent with 51 years of experience. He will be pleased to respond to your questions at 617 345 0666 or mail to 68 Fargo Street Boston, MA 02210 Fax. 617 261 0666.

How to Create Valuable Partnerships

Coordinate with the 4-H Organization in your Area

An excellent opportunity exists for local parades to improve their appearance and organization by involving and working together with the local 4-H organization. Youth should serve as equal partners in the planning and execution of parades.

What is 4-H?

4-H is the youth development organization of the U.S. Department of Agriculture, and its County Extension services at state land-grant universities. The objective of 4-H is to create supportive environments for diverse youth and adults so they can reach their fullest potential . Please see http://www.4-h.org/fourhweb/

National 4-H Council believes that communities are strengthened when youth serve in leadership positions. Youth provide resources and skills that are often overlooked, and provide a unique perspective that adults may not see. National 4-H Council has ten youth serving on its board of trustees and we value the resources they offer. Through its Innovation Center for Community Youth Development, Youth Corporate Connections, and other initiatives, Council promotes youth/adult partnerships that are beneficial for all, including the community. *We encourage other organizations to do so as well!!!*

What do you do in 4-H?

There are a variety of activities you can participate in with 4-H. You and your parade organization can become involved in organized clubs, develop special interest groups, school enrichment programs, community enrichment programs and 4-H camps. There are programs for most interests--from building web-sites to raising cattle. Involvement of 4-H in the organizational development of your parade and improvement in float building could be opportunities.

What can I gain from being involved in 4-H?

How do you join 4-H?

Contact your local Cooperative Extension Office and ask for the 4-H Agent. The office will be listed in the phone book under County Government. Your County Extension 4-H Agent can tell you what 4-H clubs are available in your neighborhood and what types of activities they offer.

The opportunity to learn through hands-on activities, the chance to develop or improve your leadership skills, and the opportunity to build a stronger, better community. Through involvement with 4-H, you will also work as an equal with adults and have the chance to meet and develop friendships with young people across the nation.

Presented By:
Annie R. Morgan
Public Relations Coordinator
National 4-H Council
7100 Connecticut Ave.
Chevy Chase, MD 20815
(301) 961-2880
amorgan@fourhcouncil.edu
http://www.4h-usa.org/

How to Use the Internet

Free 3-Month Web Site Trial for Your Parade

This option offers you a FREE EVALUATION for 3 months of a 10-page WEB SITE AND ONLINE STORE for your parade or event!

If you ORGANIZE MULTIPLE EVENTS YOU CAN HAVE AN INDIVIDUAL SITE FOR EACH EVENT!!

KEY FEATURES ARE:

1. Free 10-page WEB SITE for your ALL individual events for 3 months.
2. Free 50-product ONLINE STORE (for all your souvenirs!) for 3 months.
3. ONLINE STORE keeps your event OPEN 365 days per year.
4. You build your own web site in an afternoon.
5. You can make all changes and updates from your own computer.
6. You upload ALL your OWN PICTURES!
7. Maximum exposure for all your vendors and sponsors. They'll love it!
8. You add NEWS ITEMS as they occur.
9. After 3 months you pay only $195 per year ($19.95 per month) or discontinue.
   No obligations or costs!
10. We may be able to help you find a sponsor so your site is FREE.

For more information, and details on our EVENTS BOOSTER PROGRAM, please email y2kevents@aol.com

Reduce Phone Calls With Your Online Message Board!

As a PARTICIPATING PARADE you will be able to post YOUR questions on the NATIONAL Message Board for FEEDBACK. FREE!!!

Check The PARADES ONLINE! Bulletin Board. Go To:

http://www.bulletinboards.com/view.cfm?comcode=2016

2. You will also be able to create YOUR PARADE's OWN LOCAL MESSAGE BOARD. FOR A DEMO Go To:

http://www.bulletinboards.com/view.cfm?comcode=2017

CREATE Your Own Hometown Parade Bulletin Board At

http://www.bulletinboards.com/setup.cfm?af=parade

SPECIAL INTRODUCTORY OFFER – Only $9.95 Per Month!!!!!

At only $9.95 per month you'll save that on stamps alone!!

IT SAVES YOU A LOT OF PHONE CALLS!!!

And everyone in your community will understand the concept: It's just like pinning a note on the message board of the local grocery store!!

BulletinBoards.com, provides a unique service which allows you to create a bulletin/message board for your Parade (or organization as Chamber, CVB, School, etc.) without downloading and installing any software.

The board you create is a "Private" board (i.e., no advertising)

It's very simple to use and has all the features you would expect from a full service bulletin board service.

- ★ You Control Who Sees Your Board
- ★ No Setup Required
- ★ No Software To Download
- ★ Can Have Your Own Logo, Background and/or Advertising Banner
- ★ Ability to set up "Votable" messages/issues
- ★ Can Create SubBoards within your main board.
- ★ Ability to insert photographs with messages
- ★ Users have full HTML message formatting capability

Some Great Examples of What Others are Doing!

1. Chamber Of Commerce
http://www.bulletinboards.com/view.cfm?comcode=RCCofC

2. Local Community
http://www.bulletinboards.com/view.cfm?comcode=cbb

3. High School
http://www.bulletinboards.com/view.cfm?comcode=MCH

START YOUR MESSAGE BOARD NOW

Getting your own Bulletin Board takes less than minutes.
1. We'll help you get started
2. Customize the graphics, colors and icons
3. Add the URL to your Web site

THAT'S it: To sign up:

1. To Set Up A Bulletin Board go to
http://www.bulletinboards.com/setup.cfm?af=parade
and follow the easy instructions.

2. Then contact your parade participants, volunteers, sponsors, etc.
to alert them to this great new option

3. Of, course, we also encourage you to post questions to the PARADES ONLINE! Bulletin Board at
http://www.bulletinboards.com/view.cfm?comcode=2017
about something you like to know.

You'll get excellent feedback from your peers!!

For questions, please call 1-800-328-6120, ext. 6474

Special Products & Services

Inflate your Parade with Dynamic Inflatables

If you really want to DRAW ATTENTION TO your PARADE, just place a Dynamic Inflatable figure in a strategic location. They come in heights of up to 60 feet and will attract people from miles away.

Please see http://www.airdd.com/dynamic/

FOR AS LITTLE as $300!! SPECIAL SUBSCRIBER DISCOUNTS!!

Air Dimensional Design, Inc. (AirDD), Los Angeles, CA, brought the world Dynamic Inflatables and Airtubes. In addition to its product lines, AirDD also offers topnotch custom designs for both indoor and outdoor installations.

IDEAL ATTENTION GETTERS FOR EVENTS LARGE AND SMALL!!

The popular FLY GUYS made their debut at the Closing Ceremonies of the Olympic Games in Atlanta. Fly Guys are huge dancing nylon figures propelled by fans at their base that move and groove to any rhythm of music.

Since then, AirDD has gone on to develop wide array of Fly Guy CHARACTERS for Holidays and special occasions, including SANTA, UNCLE SAM, and more.

They have also created other DYNAMIC INFLATABLES such as the AIR FLAMES - brilliant metallic tubes that whip around in the air like fire – and SKY TICKLERS, whose colorful tentacles give them a whimsical look.

AirDD is on a continuous quest to offer the special events, parades and festivals, and other entertainment industries innovative inflatables to liven up events and grab the attention of passers-by.

New creations are always in the making whether for a particular client, an upcoming seasonal idea or just for the fun of it.

COST EFFECTIVE OPTIONS FOR EVERY TYPE OF PARADE

FOR AS LITTLE as $300!!!

The Dynamic Inflatables are easy and quick to set up. They attach to AIR MAX FANS at their base with Velcro. JUST FLIP THE SWITCH AND WATCH THEM GO!!!!

OPTIONAL BANNERS OFFER GREAT, HIGH-VISIBILITY SPONSORSHIP OPPORTUNITIES.

GO TO http://www.airdd.com/dynamic/

l. GENERAL ATTENTION GETTER – SEE FLY GUYS
Will draw folks from miles around right to your starting point!!!

Cost Of 30' FLY GUY:$950
AirMax Fans: $900 ea. (You need 2 for FLY GUYS)
Sponsor Banner Option: $250 (for 2 banners)
Rental Option: $1,100 (For three days, including fans)
Please add shipping.

ll. THEME FIGURES – SEE CAST OF CHARACTERS
*JULY 4TH – Click on UNCLE SAM
*HOLIDAY SEASON – Click on SANTA
Cost Of Inflatable: $1,500
AirMax Fans: $900 EACH (You need 2)

Sponsor Banner Option: $250 (For two banners)
Rental Option: $1,100 (For three days, including fans).
Please add shipping.

A SPECIAL ECONOMICAL OPTION:

ONE-LEGGED UNCLE SAM OR SANTA FLY GUY.
Cost Of Inflatable: $750
AirMax Fans: $900 (You only need one)

Sponsor Banner Option: $250 (For two banners)
Rental Option: $500 (For three days, including fans).
Please add shipping.

HOMECOMING - CLICK ON FOOTBALL PLAYER
Cost Of Inflatable:$1,800 (Not including printing)
AirMax Fans: $900 (You need two)
Sponsor Banner Option: $250 (For two banners)
Please add shipping
Rental option: Not Available.

III. SPECIAL SPONSORSHIP BILLBOARDS
Click On VERTITUBE, DANCING BILLBOARDS,
AND FOR THE NEW SKY FLAG - Click under What's New, Products.

Cost Of VERTITUBE or SKY FLAG: $300
AirMax Fans: $900 (You need only one)
Sponsor Banner Option: $250 (For two banners)
Rental Option: $300 (For three days including fan)
Please add shipping

CLIENTS INCLUDE

Theme Parks, Fairs and Festivals

Toy Story (Disneyland), Knotts Berry Farm-Snoopys 40th Birthday, Sea World (San Diego), Universal Studios (Orlando, FL), Paramount Park Dollywood, California State Fair Texas State Fair, Utah Arts Festival, Columbus Arts Festival (Ohio), Tahachapee Wind Festival

Special Events and Exhibits

Statue of Liberty Unveiling (New York), Easter Egg Hunt at the White House (Washington, DC), Democratic National Convention, Republican National Convention, Israel Science Museum (Jerusalem), Ronald Reagan Presidential Library

Community Events and Fundraisers

March of Dimes, Walk America Revlon Run/Walk for Breast Cancer, United Way Campaign, Gay Pride Parade, Jewish Federation Festival, Saint Monica Church Bazaar, Black Gallery (Crenshaw, CA), Urban Redevelopment Program, Heal the Bay (Santa Monica, CA)

Coloring Books & Crayons for the Kiddies

A GREAT IDEA TO ADD EVEN MORE COLOR TO YOUR PARADE

Positive Publishing, a La Jolla, CA, publisher of custom children's coloring books, has created an innovative opportunity for parades, festivals and events, resorts, hotels, etc., to attract more families.

These inexpensive books are a wonderful addition to your Parade, especially if you

would be able to get a sponsor for them (local banks, car dealers, movie rental stores, etc.)

NOTE: If you need some sponsorship ideas, please email paradesonline@egroups.com

This 11-year old firm designs and prints custom coloring books for kids depicting the event. "Kids love our books," says Tony Kampmann, Positive Publishing's founder and owner. "A custom book is a great way to promote your event and sponsors, and the kids love it!"

Easy, Low-Cost Turnkey Program

Parade organizers only need to send their brochures and PR release or description, and Positive Publishing's will do the rest. After final approval the custom coloring books can be ready in a week.
Typical rates for a 16-page book are very low. Quality coloring crayons are also available at discounted rates far below retail outlets. A popular option is a polybagged combination of coloring book and box of crayons.

FAMILY ORIENTED OPTION FOR EVERY BUSINESS

Positive Publishing's coloring books offer an affordable, family oriented marketing opportunity for every festival, event, venue, competition, etc. Its clients range from museums to fairs, from wineries to banks and include Disney, Mercedes, Marriott, Hyatt, Hilton, Ocean Spray, The Scottish Games Association, World Of Nation's, FL; Thorntonfest, CO; Towson Town, MD, and many more.

Please visit http://www.pospub.com/festivals for more information.

Contests And Sponsors

Coloring books represent a superb chance to create residual, positive reinforcement of events by creating a coloring contest. The last page of the custom book, for example, could be a mail-in drawing for prizes. They also provides excellent opportunities for local sponsorship participation.

For more information and free samples, please contact:

Positive Publishing, Inc.
1150 Silverado Street
La Jolla, CA, 92037

Phone: 858-551-0889
E-mail: pospub@aol.com

Please visit http://www.pospub.com/

One Picture is Worth 1,000 Words

What better way to remember and enjoy your Parade than with photos? The Greeting Camera with patented "Photo Phase" technology pre-imprints in full color your logo, brand or event theme onto every photo.

That's right... your parade's message on their memories!

Custom flash or non-flash cameras are pre-loaded with 24 exposure 400/ASA high definition color film. The minimum order is only 144. As part of the new unique photo imprinting capabilities we can now offer the most exciting option that you've ever seen: the "BONUS PHOTO". We can imprint right on the first photo, your own full frame

postcard complete with theme montage and descriptive type. Pre-sell next year's event, sell it to one of your sponsor's as a coupon, etc.

Remember, no one ever throws away a photo!

For details see
http://www.ideashoponline.com/camera.html

Cleanup Before your Parade

This list of waste reduction ideas is intended to help you think of new ways to prevent waste and save money. Brainstorming with others is bound to result in more ideas.

Do It Right From The Start

- ★ Plan for a low-waste event; include waste reduction strategies in all parts and phases of the event.
- ★ Select a location which practices waste reduction (e.g., waste prevention, recycling, buying recycled) or one which will work with you in achieving a "green meeting".
- ★ Make displays and decorations from used items and design them so they can be reused. Exchange decorations with other groups so they are "new."

Remind attendees to bring their own totes and have. a few on hand-for those who forget.

Don't release balloons into the environment as these create litter and harm wildlife.

Transportation

- ★ Inform participants about public transportation alternatives for getting to the conference and around town once they arrive.
- ★ Select hotels along public transportation routes.
- ★ Arrange for carpools, including to and from airports Or train stations.
- ★

All That Paper...

- ★ Reduce the quantity of written material prepared.
- ★ Don't pre-stuff conference packets, let participants take the handouts they think they will use.
- ★ Plan for what you need and avoid excess copies.
- ★ Print or copy on both sides.
- ★ Use lighter weight paper.
- ★ .Remove duplicate names and out-of-date entries from mailing lists.
- ★ Post agendas or program information instead of handing out individual copies.
- ★ Use both sides of paper and poster board before recycling.
- ★ Buy and use paper with at least 25% post-consumer recycled content.
- ★ Collect paper used at the conference for recycling (white, mixed, newspaper, and other).
- ★
- ★
- ★
- ★ If name tags are needed. select ones that can be reused. Collect the tags at

the end of the event and use them again.

- ★ Avoid paper contaminants such as: glossy/plastic coatings, plastic windows, bright colors including goldenrod, adhesives.

Recycle

- ★ Request that the facility set up recycling, or arrange for recycling yourself (contact local government for assistance).
- ★ Provide clearly labeled recycling bins to collect paper, glass, plastic, aluminum cans, cardboard, and other locally recyclable materials.
- ★ Place the recycling bins in convenient locations: meeting rooms, trade show floor, hospitality areas, lobby, corridors, registration area, loading dock, and the food service area.

Publicize Your Efforts

- ★ Advertise the event as "green" and let people know how they can contribute (such as by bringing their own mug and tote).
- ★ Include a description of what was done to make the event green in any programs/agendas.
- ★ Provide environmental educational materials.
- ★ Post informational signs near recycling and composting bins to let people know what you are doing and why.
- ★ Print or type "recycled content" on products with recycled content.

Time To Eat

- ★ Select a vendors that practices waste reduction.
- ★ When feasible, select a foods that eliminate the need for serviceware. When serviceware is needed, use reusables not disposables.
- ★ Donate unserved food to a local food bank or homeless shelter.
- ★ If possible, arrange to compost food scraps (no meat, grease, or dairy products).
- ★ Use reusable table coverings, plates, cups, and utensils.
- ★

Purchase Less Waste

- ★ Purchase products with no packaging, less packaging, or reusable packaging. Look for products in concentrate or bulk form.
- ★ Request that deliveries be shipped in returnable containers. Ask vendors to take back packaging; some may be able to reuse it.
- ★ Prior to recycling or disposing, check to see if anyone can reuse packaging materials. For example cardboard and polystyrene may be used for art projects. Also some mail companies are willing to reuse packaging (e.g., check with Mail Boxes, etc.)

Exhibits

- ★ Ask exhibitors to reduce paper and packaging.
- ★ Use reusable, recycled, and recyclable materials in exhibits.
- ★ Print handouts on recycled and recyclable paper.
- ★ Promote the use of reusable handouts.
- ★ Recommend that participants pick up onIy what they need from exhibitors.
- ★ Encourage exhibitors to reduce giveaways or only to give away items which are long-lasting, useful and made with recycled content.
- ★ Provide collection boxes so people can return what they don't want.

Reduce Use Of Toxics

- ★ Use only non-toxic cleaners and washable rags for clean up and request that the facility and food caterer do the same.
- ★ Print programs and other materials with vegetable-based inks.

Part III – Finding & Listing Parades & Festivals Near You

Free Listing in Official Internet Events Directory

This site offers FREE registration for your Parade by DATE and STATE. It is being published frequently to bank senior clubs, bus companies, veteran organizations, school groups, news media, etc.

These organizations, in turn, use it for their groups' travel planning and to inform readers, viewers, and listeners. It is therefore a unique FREE source for traffic for your Parade.

Please go to http://www.victorycorps.com/links.html and follow the easy registration instructions.

Part IV – How To Improve Your Parade

Let Your State Tourism Department 'Reign' On Your Parade!

It's the responsibility of the tourism industry to instill into the general public, and the viewers of our nation's parades, that by taking time to vacation and to recreate, people will usually have a happier and healthier society.

America has shifted from the usual one- or two-week-long standard vacation per year, to taking a series of mini-vacations over various weekends and holidays.

People are also delaying their vacation decision-making until almost their departure date. This means that vacation decisions, including choice of accommodations, events, and activities can have an influence on vacation decisions almost up to the time of departure. If properly promoted, many people may, therefore, include your parade in their vacation planning – if they know about it!

Parade Power

Parades are a part of our American heritage. They fulfill us with a sense of pride and they unite our communities. Parades also have a very favorable economic impact on local communities thanks to the participants who man the floats, visitors from nearby communities, marching bands and, of course, the thousands who'll want to watch the parade from the sidelines.

By televising your parade, thousands, and possibly millions, of people will become aware of your destination and community through the advent of your parade.

Think about the help State Tourism Departments can offer parade participants and parade organizers. Here are some special "reign" drops:

Register Your Event – Most major city, county and state tourism departments have web sites with excellent search engines. Register your events with your tourism offices. These listings will help to inform school groups, bus tours and families with kids about your parade(s). Hopefully, these people will show up for the event, because they'll learn about it. A list of state and local tourism offices is shown on the next page.

Ask Your State Tourism Department to Help Spread the Word – Many of these same tourism offices participate in motor coach conventions, travel agency meetings and they hold press conferences and distribute press releases. Your event may become one of their topics for a press release. Share the details of your events with your local Department officials. They really need to know about them.

Call us and it will 'reign' pennies from heaven.

LeRoy B. Akins, Jr., CTP
Tourism Sales Manager
New York State Division of Tourism
P.O. Box 2603
Albany, NY 12220-0603
Phone: (518) 474-7624
Fax: (518) 486-6416
Toll Free Number: (800) 225-5697
rakins@empire.state.ny.us
http://www.iloveny.state.ny.us

State & Local Tourism Dept. List

USA/Alabama

Bureau of Tourism
401 Adams Avenue (36104)
P.O. Box 4927
Montgomery, AL 36103-4927
Telephone: +1 334 242-4169
Telephone: 1-800-ALABAMA toll-free in USA
Telephone: +1 334 242-4717 TDD
Fax: +1 334 242-4554
Web site:
http://www.state.al.us
This entry last updated June 1997

Auburn/Opelika

Auburn/Opelika Convention and Visitors Bureau
714 E. Glenn Ave. / P. O. Box 2216
Auburn, AL 36831-2216
Telephone: +1 (334) 887-8747
Telephone: (800) 321-8880 toll-free in USA
Fax: +1 (334) 821-5500
Email:
maria@auburn-opelika.com
Web site:
http://www.auburn-opelika.com/
This entry last updated March 2000

Florence

Florence/Lauderdale Tourism Bureau
One Hightower Place
Florence, AL 35630
Telephone: +1 205-740-4141
Telephone: 1-888-FLO-TOUR (1-888-356-8687) toll-free in USA
Fax: +1 205-740-4142
Web site:
http://www.flo-tour.org
This entry last updated July 1997

USA/Alaska

Alaska Division of Tourism
P.O. Box 110801
Juneau AK 99811-0801
Telephone: 1-800-862-5275 toll-free in USA
Telephone: +1 (907) 465-2012
Fax: +1 (907) 465-3767
Email:
GoNorth@dced.state.ak.us
Web site:
http://www.dced.state.ak.us/tourism/
This entry last updated June 2000

Anchorage

Anchorage Convention & Visitors Bureau
524 West Fourth Avenue
Anchorage, AK 99501
Telephone: +1-907-276-4118
Fax: +1 907 278-5559
Email:
info@anchorage.net
Web site:
http://www.anchorage.net
This entry last updated May 1999

Fairbanks

Fairbanks Convention & Visitors Bureau
550 1st Avenue
Fairbanks, AK 99701
Telephone: 1-800-327-5774 visitors' guide request line toll-free in USA
Telephone: +1 907-456-5774 for information about Fairbanks

Telephone: +1 907 457-3282 administration - travel trade representatives only
Fax: +1 907 452-4190
Email:
info@explorefairbanks.com
Web site:
http://www.explorefairbanks.com
This entry last updated August 1999

Haines

Haines Convention & Visitors Bureau
P.O. Box 530
Haines AK 99827
Telephone: +1 907-766-2234
Telephone: 1-800-458-3579 toll-free in USA
Email:
hainesak@wwa.com
Web site:
http://www.haines.ak.us/

Homer

Homer Chamber of Commerce
P.O. Box 541
Homer AK 99603
Telephone: +1 907-235-7740
Fax: +1 907-235-8766
Email:
homer@xyz.net
Web site:
http://www.homeralaska.org/
This entry last updated March 2000

Juneau

Juneau Convention & Visitors Bureau
134 Third Street
Juneau, AK 99801
Telephone: +1 (907) 586-2201
Fax: +1 (907) 586-6304
Web site:
http://www.juneau.lib.ak.us/jcvb/jcvb.htm

Ketchikan

Ketchikan Visitors Bureau
131 Front Street
Ketchikan, AK 99901
Telephone: +1 (907) 225-6166
Telephone: 1-800-770-2200 toll-free in USA and Canada
Fax: +1 (907) 225-4250
Email:
kvb@ktn.net
Web site:
http://www.visit-ketchikan.com/

Kodiak

Kodiak Island Convention & Visitors Bureau
100 Marine Way
Kodiak, Alaska 99615
Telephone: +1 (907) 486-4782
Telephone: 1-800-789-4782 toll free in USA
Fax: +1 (907) 486-6545
Email:
kicvb@ptialaska.net
Web site:
http://www.kodiak.org/
This entry last updated August 1999

Matanuska-Susitna

Matanuska-Susitna Convention & Visitors Bureau
HC01 Box 6166 J21
Palmer, AK 99645
Telephone: +1 (907) 746-5000
Fax: +1 (907) 746-2688
Email:
info@alaskavisit.com
Web site:
http://www.alaskavisit.com
This entry last updated January 2000

Petersburg

Petersburg Visitor Center
Box 649
Petersburg AK 99833
Telephone: +1 (907) 772-4636
Fax: +1 (907) 772-3646
Email:
pcoc@alaska.net
Web site:
http://www.petersburg.org

Sitka

Sitka Convention and Visitors Bureau
Box 1226
Sitka, AK 99835
Telephone: +1 (907) 747-5940
Fax: +1 (907) 747-3739
Email:
scvb@Sitka.org
Web site:
http://www.sitka.org/

Skagway

Skagway Convention and Visitors Bureau
P.O. Box 1025
Skagway, Alaska 99840
Telephone: +1 (907) 983-2854
Telephone: 1-888 762-1898 toll-free in USA
Fax: +1 (907) 983-3854
Email:
infoskag@aptalaska.net
Web site:
http://www.skagway.org
This entry last updated June 2000

Southeast Alaska

Alaska Southeast Tourism Council
Post Box 20710
Juneau, AK 99802-0710
Web site:
http://www.alaskainfo.org

Valdez

Valdez Convention and Visitor's Bureau
P.O. Box 1603
Valdez AK
Telephone: +1 (907) 835-4636
Telephone: (800) 770 - 5954 toll-free in USA
Fax: +1 (907) 835-4845
Email:
valdezak@alaska.net
Web site:
http://www.valdezalaska.org/
This entry last updated September 1999

Wrangell

Wrangell Chamber of Commerce
Box 49
Wrangell AK 99929
Telephone: +1 (907) 874-3901
Telephone: 1-800-367-9745 toll-free in USA and Canada
Fax: +1 (907) 874-3905
Email:
wrangell@wrangell.com
Web site:
http://www.wrangell.com/

USA/Arizona

Arizona

Office of Tourism
2702 North 3rd Street, Suite 4015
Phoenix AZ 85009
Telephone: 888-520-3433 toll-free in USA and Canada
Web site:
http://www.arizonaguide.com/
This entry last updated March 1999

Phoenix

Greater Phoenix Convention & Visitors Bureau
400 E. Van Buren, Suite 600
Phoenix, AZ 85004
Telephone: (877) CALLPHX toll-free in USA
Telephone: +1 (602) 254-6500
Fax: +1 (602) 253-4415
Web site:
http://www.accessarizona.com/partners/phoenixcvb/
This entry last updated March 2000

USA/Arkansas

Arkansas Department of Parks and Tourism
One Capitol Mall
Little Rock, AR 72201
Telephone: +1 501 682-7777
Telephone: 1-800-NATURAL toll-free in USA
Fax: +1 501 682-1364

Email:
info@arkansas.com
Web site:
http://www.arkansas.com/
This entry last updated August 1999

Brinkley

Brinkley Economic Development
233 West Cedar
Brinkley AR 72021
Telephone: +1 870-734-1382
Email:
econdev@brinkleyar.com
Web site:
http://www.brinkleyar.com/
This entry last updated September 1999

Fort Smith

Fort Smith Convention and Visitors Bureau
2 North B
Fort Smith, Arkansas 72901
Telephone: 1-800-637-1477 toll-free in USA
Telephone: +1 (501) 783-8888
Fax: +1 (501) 784-2421
Email:
tourism@fortsmith.org
Web site:
http://www.fortsmith.org/
This entry last updated September 1999

Little Rock

Little Rock Convention & Visitors Bureau
P. O. Box 3232
Little Rock, AR 72203
Telephone: +1 (501) 376-4781
Telephone: 1-800-844-4781 toll-free in USA
Fax: +1 (501) 374-2255
Email:
lrcvb@littlerock.com
Web site:
http://www.littlerock.com/
This entry last updated September 1999

North Little Rock

North Little Rock Advertising & Promotion Commission
PO Box 5511
North Little Rock, AR 72119-5511
Telephone: 1-800-643-4690 toll-free in USA and Canada
Telephone: +1 501-758-1424
Fax: +1 501-758-5752
Email:
visitnlr@northlittlerock.org
Web site:
http://www.northlittlerock.org/
This entry last updated January 2000

Ozark Mountain Region

Ozark Mountain Region
P.O. Box 931
Marshall, Arkansas 72650
Telephone: 1-800-544-MTNS (6867) toll-free in USA
Email:
omr@ozarkmountainregion.com
Web site:
http://www.ozarkmountainregion.com/
This entry last updated April 2000

West Memphis

West Memphis Advertising & Promotion Commission
P.O. Box 1728
West Memphis, AR 72303
Telephone: 1-877-732-7598 toll-free in USA
Telephone: +1 (870) 732-7598
Fax: +1 (870) 732-7640
Email:
info@westmemphis.org
Web site:
http://www.westmemphis.org/
This entry last updated September 1999

USA/California

California Division of Tourism
Division of Tourism, P.O. Box 1499
Sacramento, CA 95812

Telephone: 800-GO-CALIF toll-free USA and Canada
Web site:
http://gocalif.ca.gov/

Berkeley

Berkeley Convention & Visitors Bureau
2015 Center Street
Berkeley, CA 94704-1204
Telephone: 800-847-4823 toll-free in USA and Canada
Email:
bconvis@ix.netcom.com
Web site:
http://www.berkeleycvb.com/
This entry last updated July 1999

Big Sur

Big Sur Chamber of Commerce
PO Box 87
Big Sur, California 93920
Telephone: +1 831 667-2100
Email:
info@bigsurcalifornia.org
Web site:
http://www.bigsurcalifornia.org/
This entry last updated August 1999

Buena Park

Buena Park Convention and Visitors Office
Web site:
http://www.buenapark.com/cvo/

Gilroy

Gilroy Visitors Bureau
7780 Monterey Street
Gilroy, CA 95020
Telephone: +1 408 842-6436
Fax: +1 408 842-6438
Email:
info@gilroyvisitor.org
Web site:
http://www.gilroyvisitor.org
This entry last updated October 1999

Humboldt County

Eureka! Humboldt County Convention & Visitors Bureau
1034 2nd St
Eureka, CA 95501
Telephone: 800-346-3482 toll-free in USA
Fax: +1 707-443-5115
Email:
redwoodvis@aol.com
Web site:
http://www.redwoodvisitor.org/
This entry last updated January 2000

Lake Arrowhead

Lake Arrowhead Chamber of Commerce
P.O. Box 219
Lake Arrowhead, CA 92352
Telephone: +1 (909) 337-3715
Fax: +1 (909) 336-1548
Email:
info@lakearrowhead.net
Web site:
http://www.lakearrowhead.net
This entry last updated August 1999

Los Angeles

Los Angeles Convention & Visitors Bureau
633 W. Fifth St., Suite 6000
Los Angeles, CA
Telephone: +1-213-624-7300
Telephone: +1-213-689-8822
Fax: +1-213-624-9746
Web site:
http://www.lacvb.com
This entry last updated March 1999

Mammoth Lakes

Mammoth Lakes Visitors Bureau
PO Box 48
Mammoth Lakes, CA 93546
Telephone: 888-GO-MAMMOTH toll-free in USA
Telephone: +1 760-934-2712
Fax: +1 760 934-7066
Email:
mmthvisit@qnet.com

Web site:
http://www.visitmammoth.com/
This entry last updated May 2000

Monterey

Monterey Peninsula Visitors & Convention Bureau
P.O. Box 1770
Monterey CA 93942-1770
Telephone: +1 831 649-1770
Fax: +1 831 648-5373
Web site:
http://www.monterey.com
This entry last updated July 1999

Newport Beach

Newport Beach Conference and Visitors Bureau
3300 W. Coast Highway
Newport Beach, California 92663
Telephone: +1 (949) 722-1611
Fax: +1 (949) 722-1612
This entry last updated January 2000

Pacifica

Pacifica Chamber of Commerce and Visitor Center
225 Rockaway Beach #1
Pacifica, CA 94044
Telephone: +1 (650) 355-4122
Email:
info@pacificachamber.com
Web site:
http://www.pacificachamber.com/
This entry last updated May 1999

Palm Springs

Palm Springs Tourist Information
333 N. Palm Canyon Drive, Suite 114
Palm Springs, CA 92264
Telephone: +1 760 778-8415
Fax: +1 760 323-3021
Email:
info@palm-springs.org
Web site:
http://www.palm-springs.org/
This entry last updated April 1999

San Fernando Valley

San Fernando Valley Convention and Visitors Bureau
15205 Burbank Blvd, Second Floor
Van Nuys, CA 91411
Telephone: +1 (818) STAR CVB
Fax: +1 (818) 947-0721
Email:
jaldrich@autry-museum.org
Web site:
http://www.valleyofthestars.org/
This entry last updated August 1999

San Luis Obispo

San Luis Obispo County Visitors & Conference Bureau
1037 Mill Street
San Luis Obispo, CA 93401
Telephone: +1 805-541-8000
Fax: +1 805-543-9498
Email:
slocvcb@slonet.org
Web site:
http://www.SanLuisObispoCounty.com
This entry last updated March 2000

Santa Cruz

Santa Cruz County Conference & Visitors Council
701 Front Street
Santa Cruz, CA 95060
Telephone: +1 831 425-1234
Fax: +1 831 425-1260
Email:
info@santacruzca.org
Web site:
http://www.santacruzca.org
This entry last updated September 1999

Santa Monica

Santa Monica Convention & Visitors Bureau
Visitor Center

1400 Ocean Avenue
Santa Monica, CA 90401
Web site:
http://www.santamonica.com/

Siskiyou County - Mt. Shasta

Siskiyou County Visitors' Bureau
PO Box 1138
Mount Shasta, CA 96067
Telephone: 1-877-747-5496 toll-free in USA
Fax: +1 530 926-3680
Email:
info@visitsiskiyou.org
Web site:
http://www.visitsiskiyou.org/
This entry last updated June 2000

Three Rivers (Sequoia & Kings Canyon National Parks)

Three Rivers - Lemon Cove Business Association
P.O. Box 818
Three Rivers, CA 93271
Telephone: +1 559 561-0410
Fax: +1 559 561-4247
Email:
merchant@threerivers.com
Web site:
http://www.threerivers.com
This entry last updated May 2000

Ventura

Ventura Visitors and Convention Bureau
89 South California St., Suite C
Ventura, CA 93001
Telephone: +1 805 648-2075
Fax: +1 805 648-2150
This entry last updated December 1998

USA/Colorado

Colorado Travel and Tourism Authority
1672 Pennsylvania St.
Denver, CO 80203
Telephone: +1 303-832-6171
Telephone: 1-800-265-6723 to order Colorado Vaction Guide toll-free in USA
Web site:
http://www.colorado.com
This entry last updated January 1999

Denver

Denver Metro Convention and Visitor's Bureau
1555 California St.
Denver Co 80210
Telephone: 1-800-462-5280 toll-free in USA
Web site:
http://www.denver.org
This entry last updated June 1997

Fort Collins

Fort Collins Convention & Visitors Bureau
420 S. Howes Street, Suite 101
P.O. Box 1998
Fort Collins, Colorado USA 80522
Telephone: 1-800-274-FORT toll-free in USA
Telephone: +1 970-482-5821
Fax: +1 970-493-8061
Email:
information@ftcollins.com
This entry last updated August 1999

Silverton

Silverton Chamber of Commerce
P.O. Box 565
Silverton, CO 81433
Telephone: +1 970 387-5654
Telephone: 1-800-752-4494 toll-free in USA
Email:
chamber@silverton.org
Web site:
http://www.silverton.org/
This entry last updated July 1999

Southwest Colorado

Southwest Colorado Travel Region
Telephone: +1 970 247-9621
Email:
swctr@frontier.net
Web site:
http://www.swcolotravel.org/
This entry last updated August 1999

Vail Valley

Vail Valley Tourism and Convention Bureau
100 E. Meadow Drive, Suite 34
Vail, Co. 81657
Telephone: +1 970.476.1000
Fax: +1 970.476.6008
Web site:
http://www.visitvailvalley.com/
This entry last updated January 2000

USA/Connecticut

Connecticut Office of Tourism
Department of Economic and Community Development
505 Hudson Street
Hartford, CT 06106
Telephone: +1 (860) 270-8080
Telephone: 1-800-CT-BOUND toll-free in USA
Web site:
http://www.tourism.state.ct.us/
This entry last updated August

USA/DC

DC Committee to Promote Washington
1212 New York Avenue, NW, Suite 200
Washington, DC 20005
Telephone: +1-202-724-5644
Telephone: 1-800-422-8644 toll-free in USA
Web site:
http://www.washington.org/
This office handles tourism inquiries from the public.
This entry last updated May 2000

Washington DC Convention and Visitors Association
1212 New York Avenue, NW, Suite 600
Washington, DC 20005
Telephone: +1 202 789-7000
Fax: +1 202 789-7037
Email:
julie@washington.org
Web site:
http://www.washington.org/
This office handles trade and industry inquiries.
This entry last updated May 2000

USA/Delaware

Southern Delaware

Southern Delaware Tourism Commission
P.O. Box 240
Georgetown, DE 19947
Telephone: +1 302 856-1818
Telephone: 800-357-1818 toll-free in USA
Fax: +1 302 856-5713
Email:
southdel@dmv.com
Web site:
http://www.visitdelaware.com/
This entry last updated August 1999

USA/Florida

Visit Florida
661 E. Jefferson Street
Tallahassee, FL 32301
Telephone: +1 850-488-5607
Telephone: 1-888-7-FLA-USA toll-free in USA
Web site:
http://www.flausa.com
This entry last updated November 1999

Florida Tourism (**UK** office)
Roebuck House
Palace Street
London SW1 5BA
Telephone: +44 171 630 6602
Fax: +44 171 630 7703
Web site:
http://www.flausa.com
This entry last updated October 1999

Alachua County

Alachua County Convention and Visitors Bureau
30 East University Avenue
Gainesville Fl 32601
Telephone: +1 352-374-5231
Fax: +1 352-338-3213
Email:
acvacb@co.alachua.fl.us
Web site:
http://www.co.alachua.fl.us/~acvacb/
This entry last updated October 1999

Daytona Beach

Daytona Convention & Visitors Bureau
P.O. Box 910
Daytona Beach, FL 32115
Telephone: 1-800-854-1234 toll-free in USA
Fax: +1-904-225-5478
Web site:
http://www.daytonabeach.com/

Daytona Beach Tourist Information
(**Germany** office)
Breslauer Str 17
D-25348 Gluckstadt Deutschland
Telephone: +49-4124-97719
Fax: +49-4124-97719 same as telephone number

Fort Lauderdale

Greater Fort Lauderdale Convention & Visitors Bureau (**Canada** office)
121 Bloor Street, Suite 1003
Toronto ON M4W 3M5
Telephone: +1 416 928-1195
Telephone: 1-888-839-4401 toll-free in Canada

Greater Fort Lauderdale Convention & Visitors Bureau (**Germany** office)
Herzogspitalstrasse 5
80331 Munich
Telephone: +49 89 2366 2133

Greater Fort Lauderdale Convention & Visitors Bureau (**UK** office)
Roebuck House, Palace Street
London SW1E 58A
Telephone: +44 171 630 9442

Islamorada

Islamorada Chamber of Commerce
P.O. Box 915
Islamorada, FL 33036
Telephone: 800-FAB-KEYS toll-free in USA and Canada
Telephone: +1 (305) 664-4503
Fax: +1 (305) 664-4289
This entry last updated December 1998

Key Largo

Key Largo Chamber of Commerce / Florida Keys Visitor Center
106000 Overseas Highway
Key Largo, FL, 33037
Telephone: 800-822-1088 toll-free in USA and Canada
Telephone: +1 (305) 451-1414
Fax: +1 (305) 451-4726
Email:
info@floridakeys.org
Web site:
http://www.floridakeys.org/
This entry last updated January 2000

Key West

Key West Chamber of Commerce
402 Wall Street
Key West FL 33040
Telephone: 800-LAST-KEY toll-free in USA and Canada
Telephone: +1 (305) 872-5988
Fax: +1 (305) 294-7806

Keys

Lower Keys Chamber of Commerce
P.O. Box 511 / MM31 Oceanside
Big Pine Key FL 33043
Telephone: 800-USA-ESCAPE toll-free in USA and Canada
Telephone: +1 305-872-2411
Fax: +1 305-872-0752
Email:
lkchamber@aol.com
This entry last updated January 2000

Monroe County/Florida Keys and Key West Tourist Development Council
3406 North Roosevelt Blvd. Suite #201
Key West, FL 33040
Telephone: 800-FLA-KEYS toll-free in USA/Canada
Telephone: +1 (305) 296-1552
Fax: +1 (305) 296-0788

Kissimmee-St. Cloud

Convention & Visitors Bureau
P.O. Box 422007
Kissimmee, FL 34742-2007
Telephone: 1-407-847-5000
Telephone: 800-327-9159 toll-free in USA
Fax: +1-407-847-0878
Web site:
http://www.floridakiss.com
This entry last updated December 1998

Marathon

Marathon Chamber of Commerce
12222 Overseas Highway
Marathon, FL 33050
Telephone: 800-2-MARATHON toll-free in USA and Canada
Telephone: +1 (305) 743-5417
Fax: +1 (305) 289-0183
This entry last updated December 1998

Miami

Greater Miami Convention & Visitors Bureau
Suite 2700 Barnett Bank Bldg
701 Brickell Avenue
Miami FL
Telephone: +1-305-539-3063
Telephone: 1-800-933-8448 toll-free

Greater Miami Convention & Visitors Bureau (**Brazil** office)
DoubleEm Representações e Promoções Ltda
Shopping Apart Hotel
Rua Barata Ribeiro 370 / Loja 311
Copacabana - Rio de Janeiro 22040-000
Telephone: +55-21-549-4173
Fax: +55-22-649-6604
Email:
doubleem@rio.com.br
This entry last updated January 2000

St. Petersburg

St. Petersburg/Clearwater Area Convention & Visitors Bureau
14450 46th St. North, Suite 108
Clearwater, FL 33762
Telephone: 877-352-3224 toll-free in USA and Canada
Telephone: +1 727 464-7200
Fax: +1 727 464-7222
Email:
spclwcvb@co.pinellas.fl.us
Web site:
http://www.stpete-clearwater.com/
This entry last updated August 1999

St. Petersburg / Clearwater Convention and Visitors Bureau (**Canada** office)
197 Arichat Road
Oakville ON L6J 5N5
Telephone: +1 905 339-0278
Telephone: 1-800-345-6710 toll-free in Canada and USA
This entry last updated July 1996

St. Petersburg / Clearwater Convention and Visitors Bureau (**Germany** office)
Alt-Erlenbach 25
60437 Franfurt am Main
Telephone: +49 61 0144052
Telephone: 0130-81-8676 toll-free in Germany
This entry last updated July 1996

St. Petersburg / Clearwater Convention and Visitors Bureau (**UK** office)
1st Floor, 182/184 Addington Road
Selsdon
Surrey, CR2 8LB
Telephone: +44 181 651-4742
Telephone: 0800-89-4607 toll-free in UK
This entry last updated July 1996

USA/Georgia

Department of Industry, Trade and Tourism
P.O. Box 1776
Atlanta, GA 30301
Telephone: +1 (404) 656-3590
Telephone: 800-VISIT-GA (800-847-4842) toll-free in USA
Fax: +1 (404) 657-5689
Web site:
http://www.georgia.org/
This entry last updated June 1998

Alpharetta

Alpharetta Convention & Visitors Bureau
3060 Royal Blvd. South, Suite 145
Alpharetta, GA 30075
Telephone: +1 678-297-2811
Telephone: 1-800-294-0923
Fax: +1 678-297-9197
Email:
info@alpharettacvb.com
Web site:
http://www.alpharettacvb.com/
This entry last updated March 2000

Atlanta

Atlanta Convention and Visitors Bureau
233 Peachtree Street NE, Suite 100
Atlanta GA 30303
Telephone: +1 404 521 6600
Fax: +1 404 577-3293
Web site:
http://www.atlanta.com
This entry last updated June 2000

Bartow County

Cartersville-Bartow County Convention & Visitors Bureau
PO Box 200397
Cartersville GA 30120 USA
Telephone: 1-800-733-2280 toll free in USA
Telephone: +1 770 387-1357
Fax: +1 770 386-1220
Email:
cvb@notatlanta.org
Web site:
http://www.notatlanta.org
This entry last updated August 1999

Douglasville

Douglasville Convention & Visitors Bureau
P.O. Box 219
Douglasville, GA 30133
Telephone: 1.800.661.0013 toll free in USA
Telephone: +1 770.947.5920
Fax: +1 770.947.5926
Email:
dglvcvb@mindspring.com
Web site:
http://www.douglasvillecvb.org
This entry last updated October 1999

Milledgeville

Milledgeville & Baldwin County Welcome Center
Convention & Visitors Bureau
200 W. Hancock St.
Milledgeville, GA 31061
Telephone: 1-800-653-1804 toll-free in USA
Telephone: +1 (912) 452-4687
Fax: +1 (912) 445-4440
Email:
tourism@alltel.net
Web site:
http://www.milledgevillecvb.com/
This entry last updated August 1999

Rome

Greater Rome Convention and Visitors Bureau
P.O. Box 5823
Rome, GA 30162-5823
Telephone: 1-800-444-1834 toll-free in USA
Telephone: +1 706 295-5576
Fax: +1 706 236-5029
Email:
goromega@romegeorgia.com
Web site:
http://www.romegeorgia.com/
This entry last updated November 1999

USA/Hawaii

Hawaii Tourism Office
P.O. Box 2359
Honolulu, Hawaii 96804
Telephone: +1 (808) 586-2550
Fax: +1 (808) 586-2549
Note: This office handles policy, planning, and product development issues.
This entry last updated January 1999

Hawaii Visitors and Convention Bureau
2270 Kalakaua Ave., Suite 801
Honolulu, HI 96815
Telephone: +1 808 923-1811

Telephone: 800 353-5846 toll-free in USA
Fax: +1 808 922-8991
Web site:
http://www.visit.hawaii.org/

Hawaii Visitors and Convention Bureau
(**Japan** office)
Sumitomo Nakanoshima Building, 2nd Floor
2-18, Nakanoshima 3-chome
Kita-ku, Osaka 530
Telephone: +81 (06) 443-8015
Fax: +81 (06) 443-8016
This entry last updated December 1998

Hawaii Visitors and Convention Bureau -
Japan Regional Office (**Japan** office)
Kokusai Building, 2F
1-1, Marunouchi 3-chome
Chiyoda-ku, Tokyo 100
Telephone: +81 (03) 3201-0430
Fax: +81 (03) 3201-0433

Kauai

Kauai Visitors Bureau
4334 Rice Street, Suite 101
Lihue, HI 96766
Telephone: +1 (808) 245-3971
Telephone: 1-800-262-1400 toll-free in USA
Fax: +1 (808) 246-9235
Web site:
http://www.kauaivisitorsbureau.org/

Lanai

Destination Lanai
P.O. Box 700
Lanai City 96763
Telephone: +1-808-565-7600
Fax: +1-808-565-9316
Email:
dlanai@aloha.net
Web site:
http://www.aloha.net/~dlanai/
This entry last updated January 2000

Maui

Maui Visitors Bureau
1727 Wili Pa Lp.
P. O. Box 580
Wailuku, HI 96793
Telephone: +1 (808) 244-3530
Fax: +1 (808) 244-1337
Email:
jstark@maui.net
Web site:
http://www.visitmaui.com/
This entry last updated January 2000

Molokai

Moloka'i Visitors Association
Box 960
Kaunakakai
Molokai HI 96748
Telephone: 1 800 800-6367 toll-free in USA and Canada
Telephone: 1 800 553-0404 toll-free in Hawaiian Islands
Telephone: +1 808 553-3876
Fax: +1 808 553-5288
Email:
mva@molokai-hawaii.com
Web site:
http://molokai-hawaii.com
This entry last updated May 1999

Oahu

Oahu Visitors Bureau
733 Bishop Street, Suite 1872
Honolulu, Oahu, HI 96813
Telephone: +1 808-524-0722
Telephone: 877-525-OAHU toll-free in USA
Fax: +1 (808) 521-1620
Web site:
http://www.visit-oahu.com/
This entry last updated August 1999

USA/Idaho

Idaho Recreation and Tourism
P.O. Box 83720
Boise, ID 83720-0093
Web site:
http://www.visitid.org
This entry last updated October 1998

Sun Valley

Sun Valley/Ketchum Chamber of Commerce
P.O. Box 2420
Sun Valley, ID 83353
Telephone: 1 (800) 634-3347 toll-free in USA
Email:
sunval@micron.net
Web site:
http://www.visitsunvalley.com/
This entry last updated January 2000

USA/Illinois

Illinois Bureau of Tourism
100 West Randolph Street, Suite 3-400
Chicago IL 60602
Telephone: 800-2- CONNECT toll-free in USA and Canada
Telephone: +1 312 814-4732
Fax: +1 312 814-6175
Email:
tourism@commerce.state.il.us
Web site:
http://www.enjoyillinois.com
This entry last updated June 1998

Southern Illinois

Southern Illinois Tourism Council
P.O. Box 250
3175 Rt. 37 North
West Frankfort IL 62896
Email:
sitc@rlc.cc.il.us
Web site:
http://www.sitc.org
This entry last updated October 1999

USA/Indiana

Department of Commerce, Tourism Development Division
1 North Capitol, Suite 700
Indianapolis, IN 46204-2288
Telephone: 1-888-ENJOY-IN toll-free in USA
Telephone: +1 317 232-8860
Fax: +1 317 233-6887
Email:
contactus@enjoyindiana.com
Web site:
http://www.enjoyindiana.com/
This entry last updated June 2000

Richmond/Wayne County

Richmond/Wayne County Tourist Information
5701 National Road East
Richmond, IN 47374
Telephone: 1-800-828-8414 toll-free in USA
Telephone: +1 765-935-8687
Fax: +1 765-935-0440
Email:
AskUs@VisitRichmond.org
Web site:
http://www.visitrichmond.org/

USA/Iowa

Department of Economic Development
Division of Tourism
200 East Grand Ave.
Des Moines, IA 50309
Telephone: +1-515-242-4705
Web site:
http://www.state.ia.us/tourism/index.html

Amana

Amana Colonies Convention & Visitors Bureau
39-38th Ave, Suite 100
Amana, IA 52203
Telephone: +1 (319) 622-7622
Telephone: 800 245-5465 toll-free in USA only
Web site:
http://www.jeonet.com/amanas/

Clear Lake

Clear Lake Area Chamber of Commerce
PO Box 188
205 Main Avenue
Clear Lake, IA 50428
Telephone: +1 515 357-2159
Web site:
http://www.netins.net/showcase/clearlake/

Iowa City and Coralville

Iowa City and Coralville Convention and Visitors Bureau
408 First Avenue
Coralville, IA 52241
Telephone: 800-283-6592 toll-free in USA
Telephone: +1 319 337-6592
Fax: +1 319 337-6592
This entry last updated September 1997

Sioux City

Sioux City Convention Center/Auditorium/Tourism Bureau
P.O. Box 3183
Sioux City, Iowa 51102
Telephone: +1 712 279-4800
Telephone: 800-593-2228
Web site:
http://www.siouxlan.com/ccat/
This entry last updated May 1999

USA/Kansas

Kansas Department of Commerce and Housing
Travel and Tourism Division
700 S.W. Harrison Street, #1300
Topeka KS 66603-3712
Telephone: +1 785 296-2009
Telephone: 800-2KANSAS toll free in USA
Fax: +1 785 296-5055
Email:
travtour@kdoch.state.ks.us
Web site:
http://www.kansascommerce.com
This entry last updated August 1999

USA/Kentucky

Web site:
http://www.kentuckytourism.com
Local offices listed below may also operate their own web sites.

Kentucky Department of Travel Development
PO Box 2011
Frankfort, KY 40602
Telephone: 800-225-TRIP toll-free in USA, TDD-equipped
Fax: +1 502 564-5695
Email:
travel@mail.state.ky.us
This entry last updated October 1999

Bardstown

Bardstown-Nelson County Tourism and Convention Commission
107 East Stephen Foster Avenue
Bardstown, Kentucky USA 40004
Telephone: 1-800-638-4877 toll-free in USA
Telephone: +1 (502) 348-4877
Fax: +1 (502) 349-0804
Email:
tourism@bardstown.com
Web site:
http://www.bardstowntourism.com
This entry last updated August 1999

Kentucky

Henderson Convention & Visitors Bureau
2961 U.S. Hwy. 41 North
Henderson, KY 42420
Telephone: 1-800-648-3128 toll-free in USA
Telephone: +1 502 826-3128
Web site:
http://www.go-henderson.com/
This entry last updated August 1996

Louisville

The Louisville and Jefferson County Convention and Visitors Bureau
400 South First Street
Louisville, KY 40202
Telephone: +1-502-582-3732
Telephone: 800-792-5595 toll-free
Email:
info@louisville-visitors.com
Web site:
http://www.louisville-visitors.com
This entry last updated August 1999

Lyon County

Lyon County Tourist Commission
P.O. Box 1030
Eddyville, KY 42038
Telephone: 1-800-355-3885 toll-free in USA
Telephone: +1 270-388-5300
Email:
lyoncounty@lakebarkley.org
Web site:
http://www.lakebarkley.org/
This entry last updated August 1999

Northern Kentucky

Northern Kentucky Convention & Visitors Bureau
50 E. RiverCenter Blvd., Suite 100
Covington, KY 41011
Telephone: 1-800-447-8489 toll-free in USA
Fax: +1 606 261-5135
Email:
INFO@NKYCVB.COM
Web site:
http://www.nkycvb.com
This entry last updated August 1999

USA/Louisiana

Office of Tourism
Box 94291
Baton Rouge LA 70804-9291
Telephone: +1 (504) 342-8100
Telephone: 800-334-8626 toll-free in USA – Consumer inquiries
Telephone: 800-227-4386 toll-free in USA – Travel agents only
Fax: +1-504-342-8390
Email:
free.info@crt.state.la.us
Web site:
http://www.louisianatravel.com/
This entry last updated October 1999

Iberia Parish

Iberia Parish Convention & Visitors Bureau
2704 Hwy 14
New Iberia, LA 70560
Telephone: 1-888-942-3742 toll-free in USA
Email:
info@iberiparish.com
Web site:
http://www.iberiaparish.com/
This entry last updated August 1999

Tangipahoa Parish

Tangipahoa Parish Tourist Commission
42271 S. Morrison Blvd.
Hammond, LA 70403
Telephone: 1-800-542-7520 toll-free in USA
Telephone: +1 (504) 542-7520
Fax: +1 (504) 542-7521
Email:
bstewart@i-55.com
This entry last updated July 2000

USA/Maine

Maine Office of Tourism
Web site:
http://www.visitmaine.com/

The Maine Publicity Bureau Inc
P.O. Box 2300
325-B Water Street
Hallowell, Maine 04347-2300
Telephone: +1-207-623-0363
Telephone: 800-533-9595 toll-free in USA
Fax: +1 207 623-0388
Web site:
http://www.mainetourism.com/
This entry last updated October 1996

USA/Maryland

Maryland Office of Tourism Development
217 East Redwood Street
Baltimore MD 21202
Telephone: +1 410 767-3400
Telephone: 800-MD-IS-FUN toll-free in USA only
Web site:
http://www.mdisfun.org/
This entry last updated October 1995

USA/Massachusetts

Office of Travel and Tourism
10 Park Plaza, Suite 4510
Boston, MA 02116 U.S.A.
Telephone: +1 (617) 973-8500
Telephone: 800-227-MASS (800-227-6277)
toll-free in USA and Canada
Fax: +1 (617) 973-8525
Email:
VacationInfo@state.ma.us
Web site:
http://www.mass-vacation.com/
This entry last updated September 1999

Boston

DoubleEm Representações e Promoções Ltda
(**Brazil** office)
Shopping Apart Hotel
Rua Barata Ribeiro 370 / Loja 311
Copacabana - Rio de Janeiro 22040-000
Telephone: +55-21-548-3754
Fax: +55-22-649-6604
Email:
doubleem@rio.com.br
This entry last updated January 2000

Cape Ann Chamber of Commerce

Cape Ann Chamber of Commerce
33 Commercial Street
Gloucester, MA 01930
Telephone: 1-800-321-0133 toll free in USA
Telephone: +1 508-283-1601
Web site:
http://wizard.pn.com/capeann/

Fall River

Fall River Massachusetts Office of Tourism
One Government Center
Fall River MA 02720
Telephone: +1 508-324-2028
Fax: +1 508 324-2626
Email:
ILike2Trvl@aol.com
Web site:
http://www.FallRiverTourism.com
This entry last updated March 2000

Salem

The Salem Office of Tourism & Cultural Affairs, Inc.
Destination Salem
10 Liberty Street
Salem, MA 01970
Telephone: 1-877-SALEMMA toll-free in USA
Telephone: +1 (978) 744-3663
Fax: +1 (978) 741-7539
Email:
info@salem.org
Web site:
http://www.salem.org/
This entry last updated March 2000

USA/Michigan

Travel Michigan
P.O. Box 30226
Lansing MI 48909
Telephone: 1-888-78-GREAT (1-888-784-7328) toll-free USA & Canada
Telephone: 1-800-722-8191 TDD
Telephone: +1-517-373-0670 Business office
Fax: +1 517 373-0059
Email:
schneiderm1@michigan.org
Web site:
http://www.michigan.org/
This entry last updated July 1999

Harbor Country

Harbor Country Chamber of Commerce
530 S. Whittaker #F
New Buffalo, MI 49117
Telephone: +1 (616) 469-5409
Fax: +1 (616) 469-2257
Email:
info@harborcountry.org
Web site:
http://www.harborcountry.org/
This entry last updated October 1999

Les Cheneaux Islands

Les Cheneaux Tourist Association
Les Cheneaux Welcome Center
P.O. Box 422

Cedarville, MI 49719
Telephone: 1-888-36-Islands toll-free in USA
Telephone: +1 (906) 484-3935
Web site:
http://home.northernway.net/~lescheneaux/
This entry last updated February 1998

USA/Minnesota

Minnesota Office of Tourism
500 Metro Square
121 Seventh Place East
St. Paul MN 55101-2112
Telephone: 800-657-3700 toll-free in USA
Telephone: +1 651-296-5029
Fax: +1 651 296-7095
Email:
explore@state.mn.us
Web site:
http://www.exploreminnesota.com/
This entry last updated July 1999

Aitkin

Up North Adventure Country
Aitkin Area Chamber of Commerce
12 2nd Street NW
PO Box 127
Aitkin, MN 56431
Telephone: +1 218-927-2316
Telephone: 800-526-8342 toll-free in USA
Fax: +1 218-927-4494
Email:
upnorth@aitkin.com
Web site:
http://www.aitkin.com/
This entry last updated April 2000

Bloomington

Bloomington Convention & Visitors Bureau
1550 East 79th Street, Suite 450
Bloomington, MN 55425
Telephone: 1-800-346-4289
Telephone: +1 612-858-8500
Fax: +1 612-858-8854
Email:
cvb@bloomingtonmn.org
Web site:
http://www.bloomingtonmn.org/index-2.html
This entry last updated November 1999

Brainerd

Brainerd Lakes Area Chambers of Commerce/Convention and Visitors Bureau
124 North Sixth Street
PO Box 356
Brainerd, MN 56401
Telephone: +1 218-829-2838
Telephone: 800-450-2838 toll-free in USA
Fax: +1 218-829-8199
Email:
info@brainerdchamber.com
Web site:
http://www.brainerdchamber.com/
This entry last updated January 2000

East Grand Forks

Greater Grand Forks Convention and Visitors Bureau
4251 Gateway Drive
Grand Forks, ND 58203
Telephone: +1 701-746-0444
Telephone: 1-800-866-4566 toll-free in USA
Fax: +1 701-746-0775
Email:
jamest@grandforkscvb.org
Web site:
http://www.grandforkscvb.org
This entry last updated July 1999

Nisswa

Nisswa Chamber of Commerce
Box 185
Nisswa MN 56468
Telephone: +1 218-963-2620
Telephone: 800-950-9610 toll-free in USA
Fax: +1 218-963-3416
Email:
VisitUs@nisswa.com
Web site:
http://www.nisswa.com/
This entry last updated August 1999

USA/Mississippi

Mississippi Division of Tourism
Post Office Box 849
Jackson, MS 39205
Telephone: 1-800-WARMEST (927-6378) brochure request line toll-free in USA
Telephone: +1 (601) 359-3297
Fax: +1 (601) 359-5757
Email:
tinquiry@mississippi.org
Web site:
http://www.visitmississippi.org/
This entry last updated May 2000

Mississippi

Mississippi Gulf Coast Convention & Visitors Bureau
Post Office Box 6128
Gulfport, MS 39506-6128
Telephone: 1-888-4MS-GULF (888-467-4853) toll-free in USA and Canada
Telephone: +1 601 896-6699
Fax: +1 601 896-6796
Web site:
http://www.gulfcoast.org/mgccvb/
This entry last updated June 1997

Vicksburg

Vicksburg Convention And Visitors Bureau
P.O. Box 110
Vicksburg, Mississippi 39181-0110
Telephone: +1 601 636-9421
Telephone: 800-221-3536 toll-free in USA
Fax: +1 601 636-9475
Web site:
http://www.vicksburgcvb.org/
This entry last updated December 1998

USA/Missouri

Department of Natural Resources, Division of State Parks
P. O. Box 176
Jefferson City, MO 65102
Telephone: +1 573 751-2479
Telephone: 1-800-334-6946 toll-free in USA
Telephone: 1-800-379-2419 TDD toll-free in USA
Fax: +1 573 751-8656
Email:
moparks@mail.dnr.state.mo.us
Web site:
http://www.mostateparks.com
This entry last updated August 1999

Division of Tourism
Box 1055, Truman State Office Bldg.
Jefferson City, MO 65102
Telephone: +1-573-751-4133
Telephone: 1-800-877-1234 toll-free in USA
Fax: +1 573 751-5160
Email:
tourism@mail.state.mo.us
Web site:
http://www.missouritourism.org/
This entry last updated October 1999

St. Peters

St. Peters Chamber of Commerce
1236 Jungermann Road, Ste. C
St. Peters, Missouri 63376
Telephone: +1 (314) 447-3336
Fax: +1 (314) 447-9575
Email:
stpchamb@inlink.com
Web site:
http://www.tek-efx.com/stpeterscofc/
This entry last updated August 1999

USA/Montana

Travel Montana
1424 Ninth Avenue
P.O. Box 200533
Helena, MT 59620-0533
Telephone: 1-800-VISITMT (1-800-847-4868) toll-free in USA
Telephone: 1-800-548-3390 ext 2 toll-free in USA
Telephone: +1 406-444-2654
Fax: +1 406-444-1800
Web site:
http://visitmt.com/
This entry last updated August 1999

USA/Nebraska

Nebraska Travel & Tourism Bureau
P.O. Box 98907
Lincoln, NE 68509-8907
Telephone: +1 800-228-4307 x631 toll-free in USA
Fax: +1 402-471-3026
Email:
tourism@visitnebraska.org
Web site:
http://www.visitnebraska.org
This entry last updated October 1999

Albion

Albion Chamber of Commerce
420 W. Market St.
Albion, NE 68620
Telephone: +1 (402) 395-6012
Fax: +1 (402) 395-6723
Email:
Ccalbn@megavision.com
Web site:
Http://www.albionne.org
This entry last updated January 2000

USA/Nevada

Nevada Commission on Tourism
401 North Carson
Carson City, NV 89701
Telephone: +1 775-687-4322
Telephone: 800-NEVADA-8 toll-free in USA
Fax: +1 775-687-6779
Web site:
Http://www.travelnevada.com/
This entry last updated December 1998

Las Vegas

Las Vegas Convention & Visitors Authority
3150 Paradise Rd
Las Vegas, NV 89109-9096
Telephone: +1-702-892-0711
Fax: +1-702-892-2824
Web site:
Http://www.lasvegas24hours.com/
This entry last updated December 1998

USA/New Hampshire

New Hampshire Division of Travel and Tourism Development
PO Box 1856
Concord NH 03302-1856
Telephone: +1 603 271-2666
Telephone: 800-FUN-IN-NH toll-free in USA/Canada
Telephone: 800-258-3608 toll-free in USA/Canada
Fax: +1 603 271-6784
Email:
Visitnh@dred.state.nh.us
Web site:
http://www.visitnh.gov
This entry last updated August 1999

Jackson

Jackson Area Chamber of Commerce
PO Box 304
Jackson, NH 03846
Telephone: +1 603-383-9356 office
Telephone: 800-866-3334 central reservations, toll-free in USA
Fax: +1 603-383-0931
Email:
info@JacksonNH.com
Web site:
http://www.JacksonNH.com
This entry last updated May 2000

USA/New Jersey

New Jersey Commerce & Economic Growth Commission
P.O. Box 820
20 W. State Street
Trenton, NJ 08625
Telephone: +1 (609) 777-0885
Telephone: (800) VISIT NJ toll-free in USA
Fax: +1 (609) 633-7418
Email:
email@commerce.state.nj.us
Web site:
http://www.state.nj.us/travel/
This entry last updated October 1999

Atlantic City

Atlantic City Convention and Visitors Authority
2314 Pacific Ave.
Atlantic City, NJ 08401
Telephone: +1-609-348-7100
Telephone: 1-888-AC-VISIT (228-4748) toll-free in USA
Fax: +1-609-345-2200
Email:
Slindkrantz@accva.com
Web site:
http://www.atlanticcitynj.com/
This entry last updated January 2000

Wildwood

Greater Wildwood Chamber of Commerce
3601 Boardwalk
Wildwood, NJ 08260
Telephone: +1 (609) 729-4000
Fax: +1 (609) 729-4003
Email:
Info@gwcoc.com
Web site:
Http://www.gwcoc.com
This entry last updated May 2000

USA/New Mexico

The New Mexico Department of Tourism
491 Old Santa Fe Trail
P.O. Box 20002
Santa Fe, NM 87501
Telephone: 1-800-SEE-NEWMEX (800-733-6396) toll-free in USA
Web site:
Http://www.newmexico.org/

USA/New York

New York State Division of Tourism
P.O. Box 2603
Albany, NY 12220-0603
Telephone: +1-518-474-4116
Telephone: 1-800-CALL-NYS toll-free in USA and Canada
Fax: +1 518 486-6416
Email:
Iloveny@empire.state.ny.us
Web site:
Http://www.iloveny.com/
This entry last updated June 2000

Albany

Albany County Convention & Visitors Bureau
25 Quackenbush Square
Albany, NY 12207
Telephone: 800-258-3582 toll-free in USA & Canada
Web site:
Http://www.albany.org
This entry last updated April 1999

Buffalo

Greater Buffalo Convention and Visitors Bureau
617 Main Street, Suite 400
Buffalo, NY 14203
Telephone: 1-800-BUFFALO toll-free in USA

Lake Placid

Lake Placid/Essex County Convention and Visitors Bureau
216 Main Street
Lake Placid, NY 12946
Telephone: 800-447-5224 toll-free in USA & Canada
Web site:
http://www.lakeplacid.com
This entry last updated May 2000

Long Island

Long Island Convention And Visitors Bureau
350 Motor Parkway, Suite 103
Hauppauge, NY 11788
Telephone: 800-441-4601 toll-free in USA
Web site:
http://www.hofstra.edu/liguide/
This entry last updated March 1996

New York City

New York Convention & Visitors Bureau
810 Seventh Avenue
New York, NY 10019
Telephone: +1 212 484-1200
Fax: +1 212 246-6310
Email:
tdale@nycvisit.com
Web site:
http://www.nycvisit.com
This entry last updated January 2000

Rochester

Greater Rochester Visitors Association
126 Andrews Street
Rochester, NY 14604-1112.
Telephone: +1 (716) 546-3070

Syracuse

Greater Syracuse Convention and Visitors Bureau
572 S. Salina Street
Syracuse, NY 13202

USA/North Carolina

Asheville

Asheville Area Chamber of Commerce
P.O. Box 1010
Asheville, North Carolina 28802
Telephone: +1 (828) 258-6101
Telephone: 800-257-1300 toll-free in USA
Fax: +1 (828) 251-0926
Email:
Visit@ashevillechamber.org
Web site:
Http://www.ashevillechamber.org
This entry last updated June 2000

Cape Fear

Cape Fear Coast Convention & Visitors Bureau
24 North Third Street
Wilmington, NC 28401
Telephone: +1(910)-341-4030
Telephone: 800-222-4757 toll-free in USA
Fax: +1(910)-341-4029
Email:
Info@cape-fear.nc.us
Web site:
Http://www.cape-fear.nc.us/
Covers Wilmington, Carolina Beach, Kure Beach and Wrightsville
Beach
This entry last updated November 1999

Carteret County

Carteret County Tourism Development Bureau
3409 Arendell Street
P.O. Box 1406
Morehead City, NC 28557
Telephone: +1 252-726-8148
Telephone: 800-SUNNY-NC toll-free in USA
Email:
vacation@sunnync.com
Web site:
http://www.sunnync.com/
This entry last updated October 1999

Chapel Hill

Chapel Hill/Orange County Visitors Bureau
501 West Franklin Street, Suite 104
Chapel Hill, NC 27516
Telephone: +1-919-968-2060
Telephone: 888-968-2060 toll-free in USA
Fax: +1-919-968-2062
Email:
chvisbur@bellsouth.net
Web site:
http://www.chocvb.org
This entry last updated October 1999

Durham

Durham Convention & Visitors Bureau
101 E Morgan Street
Durham NC 27701
Telephone: +1 919-687-0288
Telephone: 1-800-446-8604 toll-free in USA
Fax: +1 919-683-9555
Email:
tc@durham-cvb.com

Web site:
http://www.durham-nc.com/
This entry last updated March 2000

Greensboro

Greensboro Convention and Visitors Bureau
317 South Greene Street
Greensboro, NC 27401-2615
Telephone: 1-800-344-2282 toll-free in USA
Telephone: +1 (336) 274-2282
Fax: +1 (336) 230-1183
Email:
gso@greensboronc.org
Web site:
http://www.greensboronc.org/
This entry last updated October 1999

Kinston

Kinston Convention & Visitor's Bureau
P.O. Box 157
Kinston, NC 28502
Telephone: +1 (252) 523-2500
Fax: +1 (252) 527-1914
Email:
Chamber@ns1.eastlink.net
This entry last updated January 2000

Martin County

Martin County Travel & Tourism
PO Box 382
Williamston NC 27892
Telephone: 1-800-776-8566 toll-free in USA
Telephone: +1-252-792-6605
Fax: +1 252-792-8710
Email:
tourism@visitmartincounty.com
Web site:
http://www.visitmartincounty.com/
This entry last updated December 1999

McDowell County / Blue Ridge Mountains

McDowell County Tourism Development Authority
P.O. Box 1028
Marion, NC 28752
Telephone: 1-888-233-6111 toll free in USA
Telephone: +1 828-652-1103
Fax: +1 828-652-3862
Email:
tourism@mcdowell.main.nc.us
Web site:
http://www.mcdowellnc.org/
Covers Lake James, Linville Falls, Little Switzerland, Marion, and Old Fort
This entry last updated October 1999

Onslow County

Onslow County Tourism
PO Box 1226
Jacksonville, NC 28540-1226
Telephone: (800) 932-2144 toll-free in USA
Fax: +1 (910) 455-8014
Email:
webman@tcpl.com
This entry last updated October 1999

Raleigh

Greater Raleigh Convention and Visitors Bureau
P.O. Box 1879
Raleigh, NC 27602-1879
Telephone: +1 (919) 834-5900
Telephone: 1 (800) 849-8499 toll-free in USA
Fax: +1 (919) 831-2887
Email:
visit@raleighcvb.org
Web site:
http://www.raleighcvb.org
This entry last updated October 1999

Randolph County

Randolph County Tourism Development Authority
PO Box 4774
Asheboro, NC 27204
Telephone: (800) 626-2672 toll-free in USA
Telephone: +1 (336) 626-0364
Fax: +1 (336) 626-0977
Email:
tourism@visitrandolph.org

Web site:
http://www.visitrandolph.org/
This entry last updated November 1999

Vance County

Vance County Tourism Department
943 K- West Andrews Ave.
Henderson, NC 27536
Telephone: +1 252-438-2222
Email:
vctourism@gloryroad.net
Web site:
http://www.kerrlake-nc.com/
This entry last updated October 1999

Winston-Salem

Winston-Salem Convention & Visitors Bureau
601 West Fourth Street, Suite 109
Winston-Salem NC 27101
Telephone: 1-800-331-7018 toll-free in USA
Telephone: +1 336.728.4200
Fax: +1 336.728.4220 or 1-800.WSNC.CVB
Email:
vcstaff@wscvb.com
Web site:
http://www.wscvb.com/
This entry last updated January 2000

USA/North Dakota

North Dakota Tourism Department
Liberty Memorial Building
604 East Boulevard
Bismarck, ND 58505
Telephone: 800-HELLO ND (800-435-5663) toll-free in USA
Telephone: +1 701 328-2525
Fax: +1 701 328-4878
Email:
phertz@state.nd.us
Web site:
http://www.ndtourism.com/
This entry last updated November 1999

Grand Forks

Greater Grand Forks Convention and Visitors Bureau
4251 Gateway Drive
Grand Forks, ND 58203
Telephone: +1 701-746-0444
Telephone: 1-800-866-4566 toll-free in USA
Fax: +1 701-746-0775
Email:
jamest@grandforkscvb.org
Web site:
http://www.grandforkscvb.org
This entry last updated July 1999

USA/Ohio

Cincinnati

Cincinnati Convention & Visitors Bureau
300 West 6th St
Cincinnati, OH 45202
Telephone: +1-513-621-2142
Telephone: 800-344-3445

Cleveland

Cleveland Convention & Visitors Bureau
3100 Tower City Center
Cleveland, OH 44113
Telephone: +1-216-621-4110
Telephone: 800-321-1001

Columbus

Columbus Convention & Visitors Bureau
10 W. Broad St
Columbus, OH 43215
Telephone: +1-614-221-6623
Telephone: 800-354-2657

Dayton

Dayton-Montgomery County Convention Bureau
Chamber Plaza
Fifth & Main
Dayton, OH 45402
Telephone: +1-513-226-1444
Telephone: 800-221-8235 , 800-221-8234 in Ohio

East Liverpool

East Liverpool Tourism and Visitors Bureau
P.O. Box 94
East Liverpool, OH 43920
Telephone: +1 (330) 385-0845
Fax: +1 (330) 385-0581
Email:
tourism@elchamber.com
Web site:
http://www.elchamber.com/
This entry last updated April 2000

Erie County

Erie County Visitors & Convention Bureau
231 W. Washington Row
Sandusky, OH 44870
Telephone: +1-419-625-2984
Telephone: 800-225-ERIE

Hocking Hills

Hocking Hills Regional Welcome Center
13178 State Route 664 South
Logan, OH 43138
Telephone: 1-800-HOCKING toll-free in USA
Telephone: +1 (740) 385-9706
Fax: +1 (740) 385-1146
Email:
hocking@hockinghills.com
Web site:
http://www.hockinghills.com
This entry last updated November 1999

Ottawa County

Ottawa County Tourist Information
Telephone: 800-441-1271
Telephone: +1 419 734-4386
Web site:
http://www.lake-erie.com/
This entry last updated April 1996

Toledo

Toledo Convention & Visitors Bureau
Seagate Center
401 Jefferson Ave
Toledo, OH 43604
Telephone: +1-419-321-6404
Telephone: 800-234-4667 toll-free in USA

Youngstown

Youngstown-Mahoning County Convention & Visitors Bureau
101 City Centre One
Youngstown, OH 44503
Telephone: +1-216-747-8200
Telephone: 800-447-8201

USA/Oklahoma

Oklahoma Tourism and Recreation Department
15 North Robinson, Room 801
P.O. Box 52002
Oklahoma City OK 73152-2002
Telephone: +1 405 521-2409
Telephone: 800-652-OKLA toll-free in USA and Canada
Fax: +1 405 521-3992
Email:
information@travelok.com
Web site:
http://www.otrd.state.ok.us/
This entry last updated January 2000

USA/Oregon

Oregon Tourism Commission
Oregon Economic and Community Development Department
775 Summer Street NE
Salem, OR 97301-1282
Telephone: +1-503-373-1270
Telephone: 800-543-8838 toll-free in Oregon
Telephone: 800-547-7842 toll-free in USA
Fax: +1 503-986-0001
Email:
info.oregon.tourism@state.or.us
Web site:
http://www.traveloregon.com/
This entry last updated January 2000

Eugene

Eugene-Springfield Convention and Visitors Bureau

Telephone: 800-547-5445 toll-free in USA
Telephone: +1-541-484-5307
Fax: +1-541-343-6335

Lane County

Convention & Visitors Association of Lane County Oregon
115 West 8th, Suite 190
P. O. Box 10286
Eugene, OR 97440
Telephone: 800-547-5445 toll-free in USA
Fax: +1 541 343-6335

Portland

Portland Oregon Visitors Association
26 SW Salmon Street
Portland OR 97204
Telephone: +1 503 222-2223
Telephone: 1-87-PORTLAND toll-free in USA
Email:
info@pova.com
Web site:
http://www.travelportland.com/
This entry last updated June 1999

Roseburg

Roseburg Visitors & Convention Bureau
410 SE Spruce St / P.O. Box 1262
Roseburg, OR 97470
Telephone: +1 541-672-9731
Telephone: 800-444-9584 toll-free in USA
Fax: +1 541-673-7868
Email:
info@visitroseburg.com
Web site:
http://www.visitroseburg.com/
This entry last updated January 2000

Southern Oregon

Southern Oregon Visitors Association
Telephone: 1-800-448-4856 toll free in USA
Email:
joe@sova.org
Web site:
http://www.sova.org
This entry last updated November 1999

USA/Pennsylvania

Pennsylvania Office of Travel, Tourism, and Film
Room 404, Forum Building
Harrisburg. PA 17120
Telephone: +1-717-232-8880
Telephone: 1-800-VISIT-PA toll-free in USA
Fax: +1 1 717 787-0687
Email:
dcedtravel@dced.state.pa.us
Web site:
http://www.state.pa.us/visit/
This entry last updated November 1999

Erie

Erie Area Convention & Visitors Bureau
109 Boston Store Place
Erie, PA 16501
Telephone: +1-814-454-7191
Telephone: 1-800-524-ERIE toll-free in USA
Fax: +1-814-459-0241
Email:
Erie-Tourism@erie.net
Web site:
http://www.eriepa.com/
This entry last updated November 1999

Lancaster County

Pennsylvania Dutch Convention & Visitors Bureau
501 Greenfield Road
Lancaster, PA 17601
Telephone: +1 717 299-8901
Telephone: 1-800-PA-DUTCH toll-free in USA
Fax: +1 717 299-0470
Email:
lanco@padutchcountry.com
Web site:
http://www.padutchcountry.com/
This entry last updated March 2000

Lawrence County

Lawrence County Tourism
Cilli Central Station
229 South Jefferson St.

New Castle, PA 16101
Telephone: +1 724 654-8408
Fax: +1 724 654-2044
Email:
tourlc@ncconnect.com
Web site:
http://www.lawrencecounty.com/tourism/
This entry last updated March 2000

Philadelphia

Philadelphia Convention and Visitors Bureau
1515 Market St #2020
Philadelphia, PA 19102
Telephone: 800-CALL-PHL toll-free in USA
Fax: +1-215-636-3327
This entry last updated December 1998

USA/Rhode Island

Rhode Island Economic Development Corporation, Tourism Division
1 West Exchange Street
Providence RI 02903
Telephone: +1-401-222-2601
Telephone: 800-556-2484 toll-free in USA
Fax: +1-401-273-8270
Web site:
http://www.visitrhodeisland.com/
This entry last updated December 1998

USA/South Carolina

South Carolina Department of Parks, Recreation and Tourism
1205 Pendleton St.
Columbia, SC 29201-0071
Telephone: +1-803-734-1700
Telephone: 1-800-346-3634 toll-free in USA and Canada
Fax: +1 803 734-0133
Web site:
http://www.travelsc.com
This entry last updated August 1999

Walterboro-Colleton County

Walterboro-Colleton Chamber of Commerce
P.O. Box 426
109-C Benson Street
Walterboro, SC 29488
Telephone: +1 (843) 549-9595
Fax: +1 (843) 549-5775
Email:
chamber@lowcountry.com
Web site:
http://www.walterboro.org/
This entry last updated November 1999

USA/South Dakota

South Dakota Department of Tourism
711 East Wells Avenue
Pierre SD 57501-3369
Telephone: +1 605 773-3301
Telephone: 1-800-S-DAKOTA (1-800-732-5682) toll-free in USA
Fax: +1 605 773-3256
Email:
sdinfo@state.sd.us
Web site:
http://www.travelsd.com/
This entry last updated November 1999

Sioux Falls

Sioux Falls Convention and Visitors Bureau
200 N. Phillips Avenue, Suite 102
Sioux Falls, SD 57104
Telephone: 1-800-33-2072 toll-free in USA
Telephone: +1 605 336-1620
Fax: +1 605 336-6499
Web site:
http://www.siouxfalls.org/
This entry last updated February 1998

USA/Tennessee

Tennessee Department of Tourist Development
Rachael Jackson Bldg., 5th floor
320 - 6th Avenue North
Nashville, TN 37243
Telephone: +1 615 741-2159
Telephone: 800-GO2TENN toll-free in USA

Fax: +1 (615) 741-7225
Email:
tourdev@mail.state.tn.us
Web site:
http://www.tourism.state.tn.us/
This entry last updated June 2000

Chattanooga

Chattanooga Area Convention & Visitors Bureau
1001 Market Street
Chattanooga TN 37402
Telephone: +1 423 756-8687
Telephone: 800 322-3344 toll-free in USA
Web site:
http://www.chattanooga.net/cvb
This entry last updated June 1996

Clarksville-Montgomery County

Clarksville-Montgomery County Tourist Commission
312 Madison Street, PO Box 883
Clarksville, TN 37041-0883
Telephone: 800-530-2487 toll-free in USA
Telephone: +1 931-648-0001
Fax: +1 931-645-1574
Email:
clktour@clarksville.tn.us
Web site:
http://www.clarksville.tn.us
This entry last updated May 2000

Knoxville

Knoxville Area Chamber Partnership
601 West Summit Hill Drive
Knoxville, TN 37902-2011
Telephone: +1 865-637-4550
Fax: +1 865-523-2071
Email:
partnership@kacp.com
Web site:
http://www.knoxville.org
This entry last updated January 2000

Knoxville Convention and Visitors Bureau
601 West Summit Hill Drive
Knoxville, TN 37902-2011
Telephone: +1 865-523-7263
Telephone: 1-800-673-4400 toll-free in USA
Email:
tourism@knoxville.org
Web site:
http://www.knoxville.org
This entry last updated March 2000

Nashville

Nashville Convention and Visitors Bureau
161 Fourth Avenue North
Nashville, TN 37219
Telephone: +1 (615) 259-4730
Fax: +1 (615) 244-6278
Email:
nashcvb@musiccityusa.com
This entry last updated April 1999

Pigeon Forge

Pigeon Forge Department of Tourism
PO Box 1390-I
Pigeon Forge, Tennessee 37868
Telephone: 1-800-251-9100 toll-free in USA
Telephone: +1 (865) 453-8574
Fax: +1 (865) 429-7444
Email:
inquire@pigeon-forge.tn.us
Web site:
http://www.mypigeonforge.com/HOME_PF.html
This entry last updated June 2000

Smoky Mountains

Smoky Mountain Convention and Visitors Bureau
7906 E. Lamar Alexander Pkwy.
Townsend, TN 37882
Telephone: +1 (865) 448-6134
Telephone: 1-800-525-6834 toll-free in USA
Fax: +1 (865) 448-9806
Email:
smokymvb@chamber.blount.tn.us
Web site:
http://www.smokymountains.org/
This entry last updated October 1999

USA/Texas

Department of Commerce, Tourism Division
P.O. Box 12728
Austin, TX 78711
Telephone: +1-512-462-9191
Telephone: 800 8888-TEX
Web site:
http://www.traveltex.com/

Amarillo

Amarillo Convention and Visitors Bureau
Web site:
http://www.amarillo-cvb.org/

Arlington

Arlington Convention & Visitors Bureau
1905 E. Randol Mill Rd
Arlington, TX 76011
Telephone: 1-800-433-5374 toll-free in USA
Telephone: +1-817-265-7721
Fax: +1-817-265-5640
Email:
marketing@acvb.org
Web site:
http://www.arlington.org/
This entry last updated November 1999

Austin

Austin Convention and Visitors Bureau
201 E. Second St.
Austin, TX 78701
Telephone: 800-926-ACVB toll-free in USA
Fax: +1-512-272-5183
Web site:
http://www.austin360.com/acvb/

Dallas

Dallas Convention & Visitors Bureau
1201 Elm Street, Suite 2000
Dallas TX 75270
Telephone: +1 214-571-1000
Telephone: 1-800-C-DALLAS (1-800-232-5527) toll-free in USA
Fax: +1 214-571-1008
Web site:
http://www.dallascvb.com/
This entry last updated April 1999

Farmers Branch

Farmers Branch Tourism Division
13000 WM Dodson Pkwy
P.O. Box 819010
Farmers Branch, TX 75381-9010
Telephone: +1800-branch-9 toll-free in US-Mexico-Canada
Fax: +1 972-247-4836
Email:
gutierrm@ci.farmers-branch.tx.us
Web site:
http://www.ci.farmers-branch.tx.us
This entry last updated November 1999

Irving

Irving Convention and Visitors Bureau
Web site:
http://www.irvingtexas.com

La Grange

La Grange Area Chamber of Commerce
171 S. Main
La Grange TX 78945
Telephone: 1-800-524-7264 toll-free in USA
Email:
chamber@lagrangetx.org
Web site:
http://www.lagrangetx.org/
This entry last updated January 2000

Lewisville

Lewisville, Texas Visitors Bureau
551 N. Valley Pkwy.
Lewisville, Texas 75067
Telephone: 1-800-657-9571 toll-free in USA
Telephone: +1 (972) 436-9571
Fax: +1 (972) 436-5949
Web site:
http://www.visitlewisville.com/
This entry last updated June 2000

New Braunfels

The Greater New Braunfels Chamber of Commerce, Inc.
Convention & Visitors Bureau
390 S. Seguin
New Braunfels, TX 78130
Telephone: 1-800-572-2626 toll-free in USA
Telephone: +1 830-625-2385
Fax: +1 830-625-791833
Email:
nbcc@nbcham.org
Web site:
http://www.nbcham.org
This entry last updated April 1999

USA/Utah

The Utah Travel Council
Council Hall/Capitol Hill
Salt Lake City
Utah 84114-1396
Telephone: +1 (801) 538-1900
Telephone: 1-800-200-1160 toll-free in USA
Fax: +1 (801) 538-1399
Email:
utah@travel.state.ut.us
Web site:
http://www.utah.com/
This entry last updated January 2000

Salt Lake City

Salt Lake Convention & Visitors Bureau
90 South West Temple
Salt Lake City, Utah 84101-1406
Telephone: +1 (801) 521-2822
Telephone: 1-800-541-4955 toll-free in USA
Fax: +1 (801) 355-9323
Email:
slcvb@saltlake.org
Web site:
http://www.visitsaltlake.com/
This entry last updated August 1999

USA/Virginia

Virginia Tourism Corporation
901 East Byrd Street
Richmond, VA 23219
Telephone: +1-804-786-4484
Telephone: 800-VISIT-VA (248-4833) toll-free in USA
Web site:
http://www.virginia.org/
This entry last updated November 1997

Newport News

Newport News Tourism Development Office
2400 Washington Ave., 7th Floor
Newport News, VA 23607
Telephone: 888-493-7386 toll-free in USA
Fax: +1 757-926-6901
Email:
cbrouill@ci.newport-news.va.us
Web site:
http://www.newport-news.org
This entry last updated August 1999

USA/Washington

Washington State Tourism Division
Web site:
http://www.tourism.wa.gov/

Seattle

Seattle-King County Convention and Visitors Bureau
800 Convention Pl.
Seattle, WA 98101
Telephone: +1-206-461-5840

Tri-Cities

Tri-Cities Visitor & Convention Bureau
(Kennewick, Pasco, Richland)
P.O. Box 2241
Tri-Cities, WA 99302-2241
Telephone: 800-254-5824 toll-free in USA
Telephone: +1 509-735-8486
Fax: +1 509-783-9005
Email:
bureau@visittri-cities.com
Web site:
http://www.visittri-cities.com/
This entry last updated January 2000

USA/West Virginia

West Virginia Division of Tourism
2101 Washington St., E.
P.O. Box 50312
Charleston, WV 25305-0312
Telephone: +1 304 558-2200
Telephone: 1-800-CALL-WVA toll-free in USA
Web site:
http://www.state.wv.us/tourism/default.htm

USA/Wisconsin

Wisconsin Department of Tourism
P.O. Box 7976
Madison, WI 53707-7976
Telephone: 1-800-372-2737 toll-free in USA (daytime only)
Telephone: 1-800-432-8747 toll-free in USA (24 hour service)
Telephone: +1 (608) 266-7621
Fax: +1 (608) 266-3403
Email:
TourInfo@tourism.state.wi.us
Web site:
http://www.travelwisconsin.com/
This entry last updated November 1999

Racine County

Racine County Convention and Visitors Bureau
345 Main St.
Racine, WI 53403
Telephone: 1-800 C RACINE toll-free in USA
Email:
visit@racine.org
Web site:
http://www.Racine.org/
This entry last updated July 1999

USA/Wyoming

Wyoming Business Council, Tourism and Travel Division
Interstate 25 at College Drive
Cheyenne, WY 82002
Telephone: +1 307 777-7777
Telephone: (800) 225-5996 toll-free in USA
Fax: +1-307-777-2877
Email:
tourism@state.wy.us
Web site:
http://www.wyomingtourism.org/
This entry last updated March 2000

Albany County

Albany County Tourism Board
800 S. Third Street
Laramie, WY 82070
Telephone: +1 307-745-4195
Fax: +1-307-721-2926
Email:
actb@lariat.org
Web site:
http://www.laramie-tourism.org
This entry last updated March 2000

Buffalo

Buffalo Chamber of Commerce
55 N. Main Street
Buffalo, Wyoming 82834
Telephone: 800-227-5122 toll-free in USA
Telephone: +1 307-684-5544
Email:
nadgross@wyoming.com
Web site:
http://www.buffalowyoming.org/
This entry last updated March 2000

Lander

Lander Area Chamber of Commerce
160 N. 1st
Lander, WY 82520
Telephone: 1-800-433-0662 toll-free in USA
Telephone: +1 307 332-3892
Fax: +1 307-332-3893
Email:
info@landerchamber.org
Web site:
http://www.landerchamber.org/
This entry last updated January 2000

Worland, Ten Sleep

Worland - Ten Sleep Wyoming Visitor's Council
120 North 10th St.
Worland, WY 82401
Telephone: +1 307-347-3226
Email:
wacc@trib.com
Web site:
http://www.travel-wyo.com/
This entry last updated July 1999

Improving Your Parade's Profitability

SHOW ME THE MONEY -- Revenue Sources for Parades:

Entry Fees

Besides a source of income, an entry fee of $5, $25, or $100 can be an incentive to getting your entry forms returned early enough to properly follow up and document your entries. Late entries can be charged a late fee -- and you will surprised (I was!!) how many would rather pay the late fee and take an extra week getting their information together.

Grandstand Seating

You are selling a couple of opportunities here: the opportunity to not have to stand and the opportunity to arrive late and know there will be a seat with a reasonable view. To sell the seats at $5 or $10, you will probably have to beg, borrow or trade for grandstands. The Luther Burbank Rose Parade borrows grandstands from the City and trades promotional opportunities with the local fair in order to use their portable grandstands. Renting real grandstands may push your seat price up to $20.

Vendor Fees

Your spectators are a captive audience. They get bored and they get hungry. Vendors with carts can roam the route selling food, beverages, snacks and stuff. The vendors should pay you something. Although we are told that it is highway robbery, we charge the 'souvenir' vendors $100 per cart. Food vendors on the route pay $125 or 25% of their gross, whichever is greater, and don't complain. We make between $1400 to $2000 on these mobile vendors, annually.

Product Sales

You can be your own vendors. Sell coffee, soda pop, snacks, souvenirs, programs, t-shirts, hats or visors. Make your own profits. Like most revenue streams that offer a potentially higher percentage of income, you need to remember if you do this, you are also taking the risk of having left over merchandise which doesn't contribute to your profit. This works best if you are working with a sponsor who will take back unopened cases, unsold items. But if you buy the Pepsi for 50¢ a can and sell it for $1, you can see the profits can be quite good – on a warm day.

Licensing

If you are going to do this, get a lawyer to help you – as a volunteer. Licensing is how the Pasadena Tournament of Roses Parade sells merchandise. They have copyrighted or trademarked their logos and designs. They sell a third party the right to be the exclusive vendor of Tournament of Roses merchandise: sweatshirts, hats, t-shirts, aprons, polo shirts. They guarantee the vendor the opportunity to selling sites at the event. In exchange, they get a flat licenses fee and a percentage. I think

it's around 15%. Not much, but the festival takes none of the risk. There is a legal contract involved in this, because money is involved. That's why the lawyer is a good idea.

Sponsorships

Like product sales, Sponsorships are something you sell. What you are selling is the opportunity for a local business to promote itself with your audience and your entrants and people who care about your event, or some aspect of it. You give your sponsors carefully defined opportunities for recognition – usually through signage, mentions by your announcers and awards commentators, visibility in your program, and, often, free entry into the parade or free booth space at your event. The Sponsorship Fee depends not on how much you need, or how much your event costs – it depends on the value of the marketing opportunity you are giving your Sponsors. Sponsorship fees must be set so that sponsors who pay premium dollars get more opportunities than sponsors who pay less, and all sponsors get things that others cannot buy without buying into your sponsorship program. It takes time and thought to outline a Sponsorship program that is attractive to all levels of sponsors. It takes negotiating, selling and marketing skills to close Sponsorship deals with local business.

Trophy Sales

The Luther Burbank Rose Parade Festival considers Trophy Sales a part of its Sponsorship program, but it's a much more simple sale than negotiating Major Sponsorships. Our trophy sponsorships sell for $100. For $100 a business gets its name engraved on a trophy that some proud winner will display, we all hope, into eternity. They get their name announced at the awards ceremony when the trophy is awarded. They get their name in a list our thank you ad which runs after the event. Some board members sell three for $250.

Membership programs

Because parades are admission-free, they are one of the few places people who like a particular activity or performance have very little opportunity to directly support the event. Membership programs let you solicit "Friends of the Parade" – or some other creative group name – in exchange for a small fee. If you can guarantee an opportunity (premium parking, early notice about entries or tickets) you can charge more. This source of revenue is quite common with music festivals and it is often offered as the lowest level of sponsorship.

Banners

Many cities all events to hang street banner and allow sponsors names to be displayed. If the banners are up for 30 days – the maximum our ordinance will allow – that is a lot of name visibility for sponsoring businesses. This needs to be planned carefully, so that your sponsorships cover all the costs associated with the banners and get you some money – in the long run it may be a very attractive thing to Sponsors.

Exclusivity and Status

Rope off an area, or better yet, put a white picket fence around it, put up a big sign saying VIP AREA. Offer refreshments even if it's just soda and cookies. Give them something special if you can. Give seating in this area to your sponsors and local VIPs. Then sell the rest of the seats in blocks of 8 or 10 to companies that want to treat either top salespeople or clients like VIPs.

Raffles

Whether you are selling tickets, pins, or numbered t-shirts, raffles can be money

makers. Your hard costs are low: printing tickets. Your operational costs can be high: time to solicit prizes, time to sell the tickets; a proper marketing program and a review by an attorney.

Clown Corps

This really happens in Santa Rosa; Lincoln, Nebraska; Detroit, Michigan; and several more parades across the nation. Bankers, lawyers, accountants, real estate developers, business owners, dentists and doctors – each an owner, partner or top local exec of a larger corporation – put on brightly colored costumes, frizzy wigs, and full white-face clown make up. They march or ride as a group in the parade and then go back and 'work the crowds,' making friends with children and seniors especially. In exchange for the opportunity to do this – THEY PAY THE PARADE SEVERAL HUNDRED DOLLARS. In Santa Rosa, they pay $300; In Lincoln, it's $500; and in Detroit, it's $1000. Detroit has 100 clowns; Lincoln as 35; and last year Santa Rosa had 30.

Getting the Big Sponsors

Taking Inventory:

FIRST STEP IN THE SPONSORSHIP SALES PROCESS
... A PRIMER FOR MEDIA SALESPEOPLE!

What is your event? What do you have to sell? Some of the items
in your "inventory" include the following:

1. Street banners (horizontal)... the large ones across major roads;
2. Street banners (vertical) ... the small ones on lamp posts to define community areas;
3. Posters and flyers ... promotional materials designed to promote the event and distributed throughout the community where the event is being held;
4. Category exclusivity ... this can be beverages, banks, food companies, supermarkets, drugstores ... any one specific organization that wants to block the competition from the event;
5. Media ... radio, of course, but also cable or local television, local newspapers, local magazines, billboards; you will have negotiated sponsorship contracts that carry valuable media coverage for your sponsors;
6. Priority parking ... depending on your event;
7. Hospitality options ... important for business-to-business sponsor-ships as well as employee relations;
8. Ticket exposure ... if a ticketed event, the backs of the tickets have true value for sponsors to use for bouncebacks after the event (allows them to measure impact of the sponsorship);
9. Cross promotions ... think about how your various sponsors can be tied together into a promotion that enhances their sponsorship participation;
10. Opportunity for product sales or displays ... this has value for companies introducing a new product or offering a product extension of an old product (e.g., how many ways can you use Arm and Hammer Baking Soda!?);

11. On-site signage ... again, what are all the opportunities? Stage? Entrances/exits? Flagpole? Where?

12. Priority seating/viewing ... reserved seats for the sponsors, quantity contingent on the sponsorship level;

13. Anything else that you can think of that will have value to sponsors and will enhance their participation in the event! This includes leader boards at golf tournaments, net identification at a tennis tournament, scoreboard exposure at a sporting event ... use your imagination!

Your Inventory Assessment

The next step is to determine how many of each of these items you have. For example, on the large street banners, what is your limit on sponsors? 8 - 10 - 12? How many flyers and posters will be
produced? how many radio spots are included; newspaper ads; TV commercials, etc.?

Develop a matrix where you list all the inventory components down the left hand side with the second column indicating quantity and the third column the value of these components.

The media value is easy; some of the other components are not as easily valuated. For the street banners, call the local Department of Transportation and get the traffic count.

Then, call a local billboard company ... ask them what a billboard, with that traffic, would be worth. A good rule of thumb? $1.50 CPM. For the direct marketing components (posters, flyers, brochures, etc.) use a CPM of $50. And, for on-site exposure value (sampling, signage, audio announcements) use a CPM of $100.

Tickets and other components that have a face value are also included in this valuation.

Then extend them out on the matrix. For example:

Inventory

Items	Quantity	Value
Banner		
(30 days/10,000 cars day)	2	$ 900
Posters/flyers	1,000	50
Newspaper ads	???	rate card
Radio advertising	???	rate card
On-site signage	5	$5,000
(Event attendance 10,000)		

Proposal Writing/Proposal Assessing

Proposals are very individual documents. They are individual to the sponsorship seeking organization; they are individual to the specific corporation to be approached. For sponsorship investments over $1,000 there is no such thing as a generic proposal.

That said, proposals come in all sizes and shapes. Some very successful organizations never send more than a single page the first time they contact a prospect in writing. Others never send out a written proposal of fewer than ten pages.

Most successful proposals, however, do have commonalties. At the most basic level, there is no excuse for anything less than absolute accuracy in corporate names, addresses, titles and the like. Beyond that, successful proposals are designed to be read quickly or skimmed easily for the key points: what is the event; what does it offer the sponsor in terms

of value; what does it cost. If this information is buried, the prospect may not dig.
Years ago, sponsorship proposals might have been read by anyone in a corporation from a summer student helping out the CEO's secretary to a junior in accounting. Today, in most corporations, the individual reading sponsorship proposals is a thorough-going professional. Smart sponsorship seekers recognize this fact.

Rhetoric about the organization to be sponsored is kept to a minimum. Similarly, a review of the prospect's corporate history and sponsorship profile is not required. (The reader has this information.) The best proposals avoid vague promises. If, for example, increased sales are promised there must be an indication that the proposal writer understands what motivates sales. The same goes for promises to enhance corporate image or to improve community relations.

Sponsorship professionals have cautioned against putting faith in high-priced, over-packaged proposals. These individuals agree that it's the offer that makes the difference. This is not to say that an attention-getting device doesn't have its place, but it should be chosen with care and underpinned with solid business rationale.

Timing

The larger the sponsorship fee, the more highly leveraged the sponsorship is likely to be and the more lead time sponsorship seekers need to allow for corporate decision-making and subsequent development of the sponsorship.

For sponsorships above $10,000 in fee alone, the proposal process should get underway (initial contact made) a minimum of six months in advance of the event. One year in advance is typical for larger investments.

The timing for presentation of the full proposal - a separate consideration - depends on the financial cycle of the corporation (available from annual reports). As a guideline, sponsorship proposals for events of some financial magnitude are submitted a minimum of three to six months before the corporate prospect's fiscal year-end.

Putting both timing requirements together (number of months prior to the event and number of months prior to corporate year-end) can result in a lead-time of eighteen months or more for a significant sponsorship. In this discussion, what constitutes "significant" depends on the corporation, not on the sponsorship seeker.

Proposal Assessing

For corporate sponsors, the link between the definition of corporate objectives – whether related to sales targets, corporate image, product introduction, community relations, or any other purpose – and the assessment of any individual proposal, is very direct. In many situations, a given proposal clearly fits or does not fit with corporate objectives. Demographics of event attendees either do or do not match target. Sampling opportunities either do or do not match requirements. The client hospitality opportunity either is or is not in line with what's required.

The challenge comes when an event offers some of the requirements – but not others.

For example, when an airline sets as a specific corporate objective the exploitation of particular air routes, sponsorships which contribute to the accomplishment of that objective no doubt get special consideration. To continue the example, assume that development of existing Caribbean routes is high on the corporate agenda. Sponsorships of festivals, sports teams, cultural exhibitions,

and culinary competitions with a Caribbean focus will be particularly well received and conscientiously evaluated.

But what happens when demographics of event attendees are correct, but coverage or sheer size of the event is out of line? These are the proposals – and the occasions – when the corporation may want to take the lead in shaping the direction and scope of the event behind the proposal. The objectives of sponsorship seeker and corporation may come into full alignment with the corporate sponsor taking the lead.

Those assessing sponsorship proposals need to be especially aware of the needs of a variety of their internal colleagues, at a variety of levels within the corporation. If a corporation seeks to position itself as a youthful, high energy organization – an enormous variety of sponsorship opportunities might well contribute to the image. But thinking must go beyond image to the very specific objectives to be accomplished. Is the youth/energy image important primarily as an appeal to potential shareholders? to the marketplace? To the attraction of new employees?

Sponsorships exist which can contribute to the accomplishment of the whole spectrum of goals. The challenge to those assessing sponsorship proposals is to match corporate objectives to the benefits available from the sponsorship seeker.

Related Thinking

Sponsorship? Charitable contribution? Corporate philanthropy? Does it matter what we call it? Of course it does ... enormously.

All those who seek funding had best know which corporate pocket they're applying to. The request for a donation is vastly different from the proposal for a sponsorship relationship. The contact point is different; the goals are different; the language is different.

It matters, too, on the corporate side because of the widely differing goals of the donations committee, for example, and the brand management team. The opportunity for leverage is the single largest loss that comes from corporate confusion about the differences between sponsorship and charity.

Are there hybrids? Of course there are. Especially where large sums or complex funding requirements are involved. Or where a corporation continues under the leadership of a founding entrepreneur who is likely to make personal decisions on both sponsorships and charitable contributions. Following is a chart that compares sponsorship and charitable contributions.

	Sponsorship	***Charitable Contribution***
Publicity	Highly public	Usually little widespread fanfare
Source	Typically from marketing, advertising or communications budgets	From charitable donations or philanthropy budgets
Accounting	Written off as a full business expense, like promotional printing expenses or media from placement expenses	Write-off is limited to 75% of net income. This limit was increased 20% earlier this year. As a result, accounting/tax considerations are less likely to influence the way a corporation designates funding of a not-for-profit organization
Objectives	To sell more products/services; to increase positive awareness in markets and amongst distant stakeholders (customers potential customers, geographic community)	To be a good corporate citizen; to enhance the corporate image with closest stakeholders (employees, shareholders, suppliers)
Partner/ recipient	Events; teams, arts or cultural organizations; projects; programs. A cause is sometimes associated with the undertaking	Larger donations are typically cause-related (education, health, diseases, disasters, environmental), but can also be cultural, artistic or sports related. At times funding is specifically designated for a project or programs; at times it is provided for operating budgets
Where most funding goes	Sports get the lion's share of sponsorship dollars…around 65%	Education, social services, and the health sector get 75% of charitable donations

Presented By Sylvia Allen
Allen Consulting
Ordell, NJ 55430
Tel: 1- 732-946-2711
Email: sylvia@allenconsulting.com
http://www.allenconsulting.com

Inflate Your Event With Inflatables

Few things create excitement and bring out the child in us all, like a seven-story tall figure of a favorite cartoon character towering high above your parade route, staring at eye level into office building windows and stopping periodically to pirouette before the crowd. Even the skillful maneuvering of handlers as they lower these giants to pass beneath stop lights or street signs is a show in itself.

Of course, with only the mention of inflatables, visions oft he Macy's Thanksgiving Day Parade appear, and it is, in fact, the 67 years of magic created by the Macy's events department that we can thank for the appeal of inflatables in our own parades. So without 67 years of experience, what do you need to know about adding inflatables to your parade?

Choosing a Balloon Provider

Companies who specialize in inflatables can be counted on your fingers and most are members of the IFEA, so your search will not be a difficult one. A call to the IFEA office at 206/457- 3141 or check of their membership directory will supply you with the information you need. However, your selection of balloon provider(s) should take into consideration several factors.

First, you will find that not all balloon providers are created equal. Some specialize in manufacturing balloons, but do not rent them out. If you are looking to own a specialized balloon for continued use at your event (like the Kentucky Derby's Pegasus balloon), this may be your route; but for most purposes, the expense of owning a character balloon (ranging in the low five figures up to the six figures, depending on size, shape and artwork design), acquiring licensing rights, and ongoing maintenance, do not make this the most effective use of your dollars.

Those providers who do rent their products are usually able to supply a variety of options that include helium inflatables (ala Macy's), cold air inflatables and inflatable '"walkabout" costumes. Cold air inflatables are thought of mostly in terms of stationary display, but in fact can be positioned atop a mobile trailer unit (using generator power) for parade use; and "walkabout" costumes (half costume/half inflatables) can provide a fun street level addition to your parade. However, for the purpose of this chapter we will concentrate on helium inflatables.

If you will keep the following points in mind as you shop around, the result can be a positive one:

Working With One or More Providers? – If you find one balloon provider whom you feel can meet your needs, you can probably negotiate a package deal that will maximize your investment. Many providers will throw in an extra inflatable, and/or sponsor or event identification balloon(s), at the same price; or, will negotiate a lower price overall, if you work with them exclusively. The more balloons, the better package. While this can work in your favor on a year-a-year basis, I would discourage a long-term agreement with any one provider. Working with multiple providers insures that they will all work hard to earn a larger piece of your business and also offers your event a wider selection of balloons to choose from.

Balloon Material – As you look at the inflatables offered by different providers, you will note a difference in the artwork and detail of the balloon, and in the type of material used to construct the balloon. Materials range from a heavier, canvas type to a lighter, parachute style, and while this may have no bearing on whether or not your parade-goers will enjoy the balloons, it is important to compare the differences and draw that conclusion yourself.

Cleanliness & Repair – For the dollars you invest, the last thing you want in your parade is a dirty balloon or one in disrepair from a previous event. Make sure that your selected balloon provider(s) insure you that they will clean each balloon (including the handlers' ropes) and inspect it for damage prior to shipping it to your parade. Most providers will warn you in advance it there is a tight scheduling conflict for a particular balloon and will substitute a balloon of equal size in case of shipping or repair problems.

Be aware that balloon damage can occur during your parade, but most balloons are constructed in chambers, allowing the rest of the balloon to stay inflated if one chamber Is damaged.

Size – Inflatables come in a wide variety of shapes and sizes, from small spheres or themed balloons, to giant character balloons that can stand up to seven stories tall. Many balloons may be designed in terms of length, rather than height (i.e., a flying super hero).

Character or design choice may also influence size. For example, a dinosaur balloon may only come in the largest sizes, while candy cane designs may fit your Christmas theme, but only come in smaller sizes. You can generally assume that the rental fee for a balloon will increase proportionately with its size, as will your need for handlers and costs for helium.

When choosing balloons, be careful to ask potential providers if the height they quote includes the ropes or the balloon by itself. While this may seem like a silly question, some balloon providers use this trick to inflate actual heights (i.e., a 30 foot balloon with 20 foot ropes may be listed as a 50 foot balloon height).

Selection – One of the benefits of using more than one provider is the increased selection of characters, shapes and thematic balloons. Most character balloons are licensed to one particular provider for a predetermined time period, and different providers may have the rights to specific groups of characters (i.e., Hanna Barbara characters; D.C. Comics characters; etc.) If you do a nighttime parade, some inflatables are designed to be lit from the inside and can provide a spectacular addition to your event.

Depending on the number of balloons that you intend to use in your parade, keep in mind the capabilities of any one provider to supply fresh new characters/designs for multiple years without repeating past balloons. Also keep in mind ties to potential sponsors (if appropriate). For instance, a balloon design featuring a car in it may be an ideal sponsorship for a local car dealer; a cowboy may work well for a western wear store; and a light bulb is ideal for the electric company. These ties can help make your sponsorship search quicker and easier.

Most balloon rental companies will readily supply with photographs, lists and facts (i.e., size, helium and handler needed) about their balloons to help in your selection process.

Experience – Ask potential balloon providers to supply copies of reference letters and contact phone numbers for other events that have used their inflatables, and then check them. While many providers have extensive resumes, some only represent a small number of balloons and may not have the experience or product to handle your event. Even and established company can have weaknesses in specific areas that you need to be aware of.

Insurance – Insist that the inflatables provider(s) you choose include liability insurance naming your event as an additional insured. A one million dollar policy is a generally accepted amount.

Helium – Obviously, yours elected inflatables will all depend on helium. In most cases, balloon rental fees do not include the cost of the helium used to fill them. While balloon providers can include this figure in their final quote and make all the arrangements if desired, you can probably do better by working through a local helium provider and offsetting the cost through negotiated discounts or in-kind sponsorship agreements. An advance check of local helium costs will prevent surprises in your budget later and may dictate the number and size of the balloons you choose.

For smaller needs, helium will most probably be provided in ``T" tanks (canister style tanks). For larger needs, it may be possible to have the helium delivered by a tanker truck. This is generally cheaper and provides for easier and faster balloon inflation.

Written Agreements – It is imperative, after all details have been negotiated with a balloon provider(s), that you put everything in writing. You will quickly recognize that this is another area where rental companies have yet to catch up to the industry and you should not hesitate to re-write any agreement that they provide, assuring that the details meet your understanding, and return it for their signature.

Tethering/Special Requests – As events continue to look for new ways to increase sponsor exposure and value, the option of tethering inflatables following the parade itself, for increased public viewing, has become a popular consideration. Be aware that this is not a common practice for most balloon providers and must be negotiated (as should any other special requests) in advance. Need and demand may soon dictate that these special requests be readily offered as part of the basic benefits package by balloon providers to help events raise the dollars necessary to sponsor their products, but for now do not take anything for granted.

Lodging/Meals/Transportation – Most balloon providers require that the event provide lodging, meals and local transportation for their staff and trainers, in addition to rental fees. Also required is a truck or van to transport the balloons upon their arrival in your city.

Before you undertake inflatables in your parade, a visit to or conversations with other events that currently use inflatables, keeping in mind the points we have discussed briefly here, can help make the whole process easier and more rewarding.

Presented By:
Steven Wood Schmader
Boise River Festival
7032 Eisenman Road
Boise, ID 83716

Tel. 208 - 338-8887

Fax. 208-338-3833
E-mail shmader@boiseriverfestival.org
http://www.boiseriverfestival.org

How to Attract the Babyboomers to Your Parade

There are four effective ways to attract group travel to your parade, festival, or event. With the Baby Boom generation reaching middle age, group travel is growing by the day:

1. Bank Senior Clubs

Promote your event to all banks in a 100-mile range. Many banks have travel clubs that plan monthly trips for their seniors account holders. These clubs are often headed by a full-time or part-time Club Director, usually a bank employee.

Bank Club Directors plan their trips months in advance, so make sure you get your information out early. Get their name and address, fax number (For a Broadcast Fax), and e-mail address, and invite them and their groups to your event.

A convenient place to find this information for banks in your area is the web site of the Independent Community Bankers Association of America at http://www.ibaa.org/

Remember, bank groups usually travel in groups of 40 so your region's banks could significantly expand your event's audience.

For more information about the bank travel market, please visit Bank Travel Management Magazine at http://www.banktravelmanagement.com

2. GLAMER – Group Leaders of America

A very effective way to get the word out about your event is to attend your regional GLAMER Shows. GLAMER leads the industry as the nation's largest organization for senior group travels. It holds marketplaces in 65 cities coast-to-coast bringing together the travel industry and over 20,000 senior group travel leaders.

GLAMER Group Leaders come from Bank Clubs, AARP Chapters, Senior Centers, Church Groups, Retirement Villages, Corporate and Federal Retirement Groups, etc.
GLAMER also provides the Group Travel Leader newspaper to deliver your message directly to 30,000 group travel l leaders and direct mail programs to over 53,000 qualified senior group travel decision-makers.

For information please visit http://www.glamer.com

3. Tour Bus Groups

To contact the tour and charter bus companies in your area about your event, just visit the web site of the United Motorcoach Association (UMA) at http://www.uma.org and select the state(s) of your choice.

It will provide easy access to bus companies and their respective tour managers. While at the site, you may also want to visit the UMA's informative Consumer Checklist.

When sending information about your event to bus companies you should include maps showing parking facilities, hotels and restaurants catering to the group travel market, bus
maintenance garages, etc.

You could also contact the American Bus Association (ABA) at www.buses.org/frameset.cfm The ABA hosts its Marketplace each December, one of the largest group travel trade shows, and annually ranks the Top 100 Group Travel events in the US and Canada.

North American Motorcoach & Tour Owners and Operators (Buyers) meet with representatives of the travel and event planning industry (Sellers) in prescheduled 7-minute appointments – up to 52 appointments a day.

For information, please visit www.buses.org/frameset.cfm

4. Official Internet Events Directory

This site offers FREE registration for your event by DATE and STATE. It gets published weekly to Bank Senior Clubs, bus companies, veteran organizations, school groups etc.

These organizations, in turn, use it for their groups' travel planning, so it's another FREE source for traffic for your event.

Please go to http://www.victorycorps.com/links.html and follow the easy registration instructions.

PART V – ADDENDUM

Top 10 Reasons Why Parade Floats Work

1. Cost-effective exposure compared with traditional advertising.
2. Community effort which lets customers become your target audience.
3. High Impact. Not even billboards match the dazzle of a moving float!
4. Participation in most parades is free.
5. Floats advertise your Office and Employees effectively.
6. Opportunity for tie-ins with community groups (Scouts, Little League, etc.)
7. Cements relationships with potential customers.
8. Annually 250,000 parades are held in the US.
9. Growing demand for float participation in parades and festivals.

   and,.....

10. **Most of all, it's easy, it works, and it is FUN!!!!**

Your Parade Improvement Tool Kit

There are many FREE RESOURCES on the Internet which can help you IMPROVE YOUR PARADE.

We are listing the best ones below. If you like them, BOOKMARK them, and build your private IMPROVEMENT TOOL KIT.

If you know of other valuable sites for Parades, please email to paradesonline@egroups.com

PARADE IMPROVEMENT TOOL KIT

1. HOW TO BUILD A FLOAT
   eMail victorycorps@aweber.com... for 13-page instruction booklet and 4-color parade supply brochure. FREE OF CHARGE!
2. WHERE TO GET FLOAT SUPPLIES & FLOAT KITS
   Visit
   http://www.victorycorps.com/floats.html
3. WHERE TO FIND THE BANDS

Bands are a key component of every Parade.
World Of Pageantry --
http://www.worldofpeagentry.com

Band Web Ring --
http://www.webring.org/cgi-bin/webring?ring=march;list

Drum Corps International --
http://www.dci.org

Marching.com --
http://www.marching.com/

4. FREE PUBLICITY FOR YOUR PARADE
   Register Your Parade In The Official Internet Events Directory
   http://www.victorycorps.com/links.html

5. WEB SITE FOR YOUR PARADE
   ONLY $19.95 Per Month – 3-Month FREE TRIAL!!
   http://www.wizmo.com/index.asp?affiliateid=1933

6. HOW TO INVITE THE GROUP TRAVEL MARKET
   Group Leaders Of America --
   http://www.glamer.com
   United Motorcoach Association --
   http://www.uma.org

7. SPONSORSHIP ASSISTANCE
   Please visit
   http://www.allenconsulting.com

8. FUNDRAISING IDEAS FOR YOUR PARADE
   Please visit
   http://www.fundraisingweb.org/
   The Greeting Camera
   http://www.ideashoponline.com/camera.html

9. EXAMPLE OF EXCELLENT CORPORATE CAMPAIGN
   How To Mobilize Volunteers --
   http://www.rainbird.com/parade

10. OTHER RESOURCES YOU WILL NEED
    For Year 2000 PARTY HELPERS, please visit
    http://www.victorycorps.com/cgi-bin/party_helpers.cgi?page=party_results

Helpful Forms

In this section we are providing you with some helpful, handouts, checklists and forms.

Important Rules and Guidelines

The following is a list of rules and guidelines that have been set forth for the smooth operation of the Parade and **most importantly the safety of all participants, volunteers and spectators**. The rules and guidelines **MUST** be followed by all participants and will be enforced by Police and Parade Officials. If any of these rules and guidelines are not adhered to by a participant, the entry will be removed from the parade line of march and will NOT be invited back to participate in future parades. Parade personnel will be stationed along the parade route with police watching all entries.

NO THROWING OR DISTRIBUTING OF FAVORS OR HANDOUTS!
This is EXTREMELY DANGEROUS as spectators (particularly children) will run out into the road to retrieve favors or handout and could be struck by a moving vehicle. This is a serious liability factor, one that has resulted in injuries in other major parades.

NO ADVOCATING, OPPOSING OR DEPICTING OF ANY POLITICAL, RELIGIOUS, OR SOCIAL ISSUES. Any unit doing so will be removed from the parade line of march.

NO SPRAYING OF WATER OR OTHER LIQUIDS FROM UNITS!
This is EXTREMELY DANGEROUS! This is a serious liability factor, one that could result in personal injury or property damage.

NO BLOWING OF SIRENS OR VEHICLE HORNS IN THE PARADE!
This pertains to all fire companies, fire trucks and any other vehicles. This is a safety precaution in case of an emergency. If sirens are blowing, real emergency vehicle sirens cannot be heard, which is confusing to spectators and parade participants and constitutes a safety hazard. It can be distracting to other performing units in the parade as well as spectators.

NO PERSONS OR ARTICLES HANGING OVER THE SIDES OF FLOATS OR VEHICLES!
This is EXTREMELY DANGEROUS! This is a serious liability factor that could result in personal injury. If a unit is in violation of this rule, it will be removed from the parade immediately.

NO ALCOHOLIC BEVERAGES .
Alcoholic beverages are NOT allowed on any participant or in any vehicle. IT WILL BE CONFISCATED. Participants consuming alcohol prior to or during the parade will be removed from the line of march.

NO FORM OF DRILLING IN STOPPED POSITION.
The parade must continue in a forward motion, unless your unit is specifically notified to stop by a parade official.

ALL ENTRIES ARE BY INVITATION ONLY:
Participants must be approved in writing by the parade staff to participate. No unit will be accepted into the parade on parade day. All entries participating were chosen on their uniqueness, appearance and entertainment value. Units must present themselves as such.

ENTRY APPEARANCE: All units must appear in full uniform or costume. Staff or assistants accompanying staff must be properly attired. **No** strollers, child carriers, wagons, or back packs allowed. **No** additions to the unit is allowed, such as vehicles, people, etc. without prior notification and written approval by parade officials. Any authorized vehicles accompanying the entry must be clean and decorated. Any unit not appearing on parade day as originally presented to parade staff on the application, may be dismissed from the parade and will not receive future invitations to participate in the Parade.

ENTRIES ABSENT ON PARADE DAY: If any accepted unit does not appear on parade day, without prior notification to the parade staff, they may not receive future invitations to participate in the Parade.

COMMERCIAL BUSINESS PARTICIPATION: Any commercial business entering a unit or sponsoring a unit in the parade must be a parade sponsor. **NO commercial advertising is allowed on floats, vehicles or participants other than parade sponsors. This includes any type of signage on vehicles in the parade.**

BALLOON HANDLERS: All handlers must adhere to the parade rules and regulations. Pre-parade training sessions will be provided the morning of the parade. Balloon handlers will be provided with white coveralls. Turn in the coveralls at the end of the parade in the balloon de-staging area. **You must read and listen to all instructions given by balloon staff.** You may be asked to appear early in the staging area to assist with balloon inflation or placement in line. You should wear gloves!

No vehicles or banners are allowed to accompany your organization without the prior approval by the parade.

EQUESTRIAN/ANIMAL UNITS: Each equestrian/animal unit **MUST** provide their own cleanup crew, in costume, in the parade following directly behind the unit. Equipment should be hand powered. No trucks or vehicles allowed. Any rider or handler showing inability to control their animal will be deemed unsafe by police or parade officials and will be removed from the parade. This is a safety precaution for the riders, handlers, parade participants and spectators.

FLOATS: Units must comply with the float guidelines and criteria. (enclosed) **ALL floats must carry a current dated 2A10BC fire extinguisher(s) (requirement of the Fire Department)**. Persons riding on the float must be secured with hand holds or seating. Vehicles pulling floats should be clean.

VEHICLES: Any vehicle that has been approved by parade staff to accompany an entry and is decorated must carry a current dated 2A10BC fire extinguisher. No persons will be allowed to ride on the outside of the vehicle. Vehicles should be clean.

TELEVISION: This is scheduled to be a national broadcast. **All** units must proceed and perform in a forward motion at all times even in the television staging area. **Staff or assistants with units must pass to the plaza side of the television stage area.**

KEEP IN MIND: A representative of your organization has signed the original entry application understanding all parade rules and guidelines presented.

NOTE: THE PARADE ORGANIZERS RESERVE THE RIGHT TO REJECT ANY ENTRY AT ANY TIME AND ALL DECISIONS ARE FINAL.

Parades are to be fun, entertaining, and safe for participants and spectators. Enjoy!

Article provide by:
Ray Pulver
UpBeat Parade Productions
Consulting, Management and Production of Parades and Related Events
5320 Cedar Grove Circle
San Jose, CA 95123
408-226-9680 or email at
Upbeatparades@aol.com

Guaranteed Sponsors for Any Parade

Sometimes it's hard to know where to start when soliciting sponsorships. Here is a list of the top 20 potential sponsors you can approach for almost any event.

- ★ Local electronics retailer;
- ★ Local beer bottler;
- ★ Local soft drink bottler;
- ★ Local banks

- ★ Local restaurant association;
- ★ Local retailers' association;
- ★ Car dealers;
- ★ Automobile aftermarket;
- ★ Long distance carriers;
- ★ Mobile telephone companies;
- ★ Network marketing companies (Amway, Nu Skin, Mary Kaye, etc.);
- ★ Craftspeople;
- ★ Antique dealers;
- ★ Fresh produce dealers (mini-Farmer's Markets);
- ★ Local radio;
- ★ Local cable;
- ★ Local newspapers;
- ★ Food vendors;
- ★ T-Shirt vendors;
- ★ Flea market vendors.

Allen Consulting, Inc. 732-946-2711

Sponsorship Fact Sheet Format

TITLE OF EVENT___(this is the name of your event)
DATE OF EVENT___(when is it being held ... dates and days)
HOURS OF EVENT___(when does it start, when does it end)
EVENT LOCATION ___(where is it being held ... city, state, location)

ATTENDANCE/
AUDIENCE (how many people, what types of, people seniors? children? Gen X?)

ACTIVITIES
Fireworks
Entertainment
Arts and Crafts
Food
3 on 3 Basketball
Beauty contest
Parade
(put in the activities that would be attractive to your sponsors for participation)

MARKETING OPPORTUNITIES
Signage
Posters, banners
Database development
Media (radio, television, cable, print ... spell it out clearly and concisely; e.g. you will get 50 :30 spots,one full page, etc.)
Product sales
Couponing/bouncebacks
Branded/licensed merchandise
Contest, promotion, register to win
Pouring rights

... what else? (Use your imagination to enhance this list of marketing opportunities so they get excited about the prospect of participating in your event)

SPONSORSHIPS AVAILABLE RANGING UP TO $_____

Then, put in approximately three lines of good "sell" copy. Summarize key points, conclude with value and ask them to seriously consider this marketing opportunity for their particular product or service.

FOR FURTHER INFORMATION, CONTACT
-NAME- -TELE #- -FAX #-

Actual Fact Sheet for an Event

OCEANFEST '99 - FACT SHEET

LOCATION: Oceanfront, promenade and beach area at The Ocean Place Conference Center & Resort, Long Branch, NJ

DATES/TIMES: Saturday, July 3rd, 1999 ... 12 nn to 5:00 pm
Sunday, July 4th, 1999 ... 10 am to 10 pm

ATTENDANCE: 250,000+

AUDIENCE: Attendees average 30-45 years old, professional, married with children. Visitors come from all over New Jersey and metro New York.

SPECIFIC ACTIVITIES: Spectacular fireworks display VIP reception and priority viewing ..."Evening Under the Stars"
Master sandsculpting championship
3-on-3 basketball tournament
Professional soccer clinic
Amusements and kiddy rides
Entertainment ...bands, dancing, singing, performance art
Wide range of food selections
Quality arts and crafts

MARKETING OPPORTUNITIES: Radio, TV, and print coverage
Three large street banners on Broadway, Joline, Norwood Ave.
Inclusion on posters, flyers, etc. (100,000+)
On-site signage
Booth space
Hospitality

PROMOTION IDEAS: Product sales
Product sampling
Database development (register to win)
Contest/promotions
Premium incentives
Couponing/bouncebacks
Cross-promotions/partnerships

A terrific opportunity to become involved in a community event that attracts over 100,000 people each year from all areas of New Jersey and the metropolitan area of New York City. One of the premiere events on the Jersey Shore.

Allen Consulting, Inc. 732-946-2711

Marching Bands at a Glance

1. The Anatomy Of A Marching Band

Types

- ★ Drum & Bugle Corps
- ★ Armed Services
- ★ Fife and Drum
- ★ Junior High School
- ★ High School
- ★ College
- ★ Ethnic

Styles

- ★ Drum Corps
- ★ Big Ten
- ★ Show Band
- ★ Military

Sections within the band

- ★ Brass
- ★ Woodwind
- ★ Percussion
- ★ Pit
- ★ Colorguard
- ★ Auxiliary

- ★ Dance Team
- ★ Pom Squad
- ★ Baton
- ★ Drum Majors

Staff

- ★ Band Director
- ★ Assistant Director
- ★ Percussion Instructor
- ★ Auxiliary Instructor (dance, baton, flag, pom, etc.)
- ★ Drill Instructor
- ★

The Booster Group

- ★ Fund Raising, Chaperones, Political Clout
- ★ Trip Planning and Organization

2. Getting Them To Your Parade

- ★ National Television
- ★ Local Television
- ★ Large Crowd
- ★ Pay the Director & Band a fee
- ★ Cover their bussing costs
- ★ Offer them a meal and plenty of liquids
- ★ Pin, Patch Program, souvenirs!
- ★ Tie them in with a production number
- ★ Offer a pre or post parade performance in front of the VIP stands prior to the parade step off or following the parade.
- ★ Cover lodging
- ★ Extra performance opportunities
- ★ Lifetime opportunity,
- ★ Right time of year
- ★ Ask for a referral if they can't make it

3. Marching Season

- ★ August: Marching Band Camp
- ★ Sept – Nov.: Field Show Contests and Home Football
- ★ Nov. - Dec.: Football playoffs, parades, bowl game, trips
- ★ Jan. – May: Don't even bring up the word M.B.
- ★ June – July: Limited rehearsal and possible summer trip or parade. (Director's free time is sacred)

4. Special Needs

- ★ Give the band and director plenty of notice - 3-5 months to get your event on his calendar of events.
- ★ Don't dictate what music they should play.
- ★ Don't expect them to march too fast or slow, or to play their music all the time during your parade.
- ★ Give them clear instructions for line-up, drop off, bus parking, parade route length, stop and start, maps, water, restrooms, television, VIP area, competing problems or units such as sound system on route, horses, fireworks, fire trucks' surprises' etc.
- ★ Make sure the band is 'safe' from crowd crazies, horses, slippery streets, camera cords, etc.
- ★ Take care of the director- with a plaque, T-shirt, pin, program or any other souvenirs and gifts that may be

appropriate. Treat them as you would a VIP because they are one!

- ★ Assign escorts to each band - meet them, walk the parade with them, put them back on their busses.
- ★ Use them wisely in their position placement within the line-up
- ★ A small band can be a good band - a large band can have just as large of an ego.
- ★ Give them credit on announcements and program - make sure it is spelled right and said right over the PA or television.
- ★ Give theme every reason to want to come back to your parade and to tell their fellow buddy band directors.
- ★ Remember, it's really not a parade without a marching bands!!

Written by:

Douglas K. Green
Executive Director and Vice President
Bowl Games of America,
Sky's The Limit Productions
And Bands on Parade
Divisions of Heritage Festivals LLC.

Recycling Steps for Your Parade

Recycling at outdoor events can be difficult. Unless your program is clear and simple, the general public will not understand your system and will not recycle. The critical issue for recycling at outdoor events is to make your system foolproof. Even then expect some not to follow the rules.

1. Designate a Recycling Coordinator for the event.

2. Check any special recycling requirements in your event permit. Be sure that you have enough staff or volunteers to comply with your recycling plan.

3. Determine the amount and type of waste which is likely to be generated at your event. Typically, this will be beverage containers and cardboard. Choose recycling containers that are well marked and that look much different from trash receptacles. Place them in clusters near your trash bins throughout your space and mark them well.

4. Choose containers with lids that emphasize your program. For cans, the container should have a small round hole. For paper, use lids with slots. Marking your containers well is critical to improving your recycling results.

5. Have lots of containers. The more obvious your program is, the more success-you will have. Don't leave it up to people to hunt for a recycling bin - they won't.

6. Discuss your recycling plan with the person in charge-of picking up the waste from your event Make sure they know what types of waste you will produce, ask for their

input, and find out if they have adequate equipment to take your separated trash and recyclable materials.

7. Also, include recycling information in your event brochure and have recycling bins available for those brochures.

Associations & Organizations

Joining an association or any type of organization not only ties you to a new network – it can also boost your career. As a member of a local association you'll discover openings to all your community's professional avenues. In the instance of an association that is local but has a tie to a national or international organization, there are industry specific values and benefits that can only be found outside of a state or region.

Local associations provide grassroots networking. Membership in a local organization puts you at the hub of a tight knit grassroots network with event peers and sponsors in your community. Many of your peers will have the knowledge and skills to help you avoid potential pitfalls. You'll also gain recognition for your expertise as you share your own solutions.

Some national associations offer automatic concurrent membership in a local state or regional association in addition to the national or international one. There's no added cost for the double membership but there are big added benefits. While an integral part of the International Festivals & Events Association's (http://www.ifea.com) international network, each state and regional chapter association also exists as a separate entity.

Each produces its own educational conferences and seminars and publishes its own quarterly newsletter. Guided by a local slate of officers and board of directors, each presents ample member leadership opportunities. Some chapter associations also offer annual awards programs, scholarship funding, web site listings and links, fundraisers, retreats and other professional development opportunities.

Leadership

Local associations comprise smaller professional pools, compared to an international organization's extended network. Double memberships bring you the best of both worlds. Local chapter membership ensures you'll find opportunities for developing your leadership skills serving on committees and on the board of directors. You may even land in an officer's chair. Those positions can serve as a springboard to the upper echelons of leadership of parent organizations

Information access

Membership in local chapters also presents you with increased access to vital industry information via newsletters. Most organizations have a newsletter that brings you news of chapter leader plans and decisions, features about other member events in your region, job openings and a calendar of important dates.

Besides keeping you informed, chapter newsletters often become member communications vehicles, offering individual events a means of publicizing their success stories.

Education

Furthering your knowledge base is the primary reason for belonging to an

association. How many times have you found yourself looking for resources to help you solve problems of dealing with your parade? Whether it's how to screen applications for entries, creating a volunteer manual, or managing and expanding finances, there are not many avenues for educating yourself on parades or special events. You'll find local chapter membership brings professional development opportunities right to your doorstep. As a member of IFEA you'll attend yearly conferences and seminars at discounted registration rates for affiliated chapters -- that means you'll pay less than other attendees for the same outstanding educational experience!
Below are links to a few industry organizations:

Below are links to a few industry organizations:

IFEA - International Festivals & Events Association http://www.ifea.com/

IAFE - International Association of Fairs and Expositions http://www.iafenet.org/

ISES - International Special Events Society http://www.ises.com/

CIOFF - Conseil International des Organisations de Festivals de Folklore et d'Arts Traditionnels
http://www.cioff.org/

NRPA - National Recreation and Park Association http://www.nrpa.org

ICAS - Intenrational Council of Air Shows
http://www.airshows.org/
WFA - Western Fairs Association
http://www.fairsnet.org/

IFEA Affiliated and State/Regional Member Associations

Alabama/Mississippi Festivals & Events Assoc.
Marianne McLeod
Jubilee CityFest
416 North McDonough Street
Montgomery, AL 36104
phone: 334-834-7220
fax: 334-834-7226
e-mail: cityfest@mindspring.com
web site: http://www.jubilee.cityfest.org

***Arkansas Festival Assoc.**
Lara Schock
P.O. Box 2737
Little Rock, AR 72203
phone: 501-223-5416
e-mail: zhivagoGrl@aol.com

Arizona Festivals & Events Assoc.
Vern Biaett, Jr.
City of Glendale
Special Events Division, 5850 W Glendale Avenue
Glendale, AZ 85301
phone: 623-930-2963
fax: 623-915-2696
e-mail: VBiaett@ci.glendale.az.us
web site: http://www.ci.glendale.az.us

***BC Assoc. of Festivals & Events**
Garth McCreedy
P.O. Box 538
Squamish, BC V0N 3G0 Canada
phone: 250-558-1660
fax: 250-558-1670
e-mail: festival@mountain-inter.net

CalFest
(CA & NV)
Kenneth Coulter
Mammoth Lakes Jazz Jubilee
P.O. Box 909
Mammoth Lakes, CA 93546
phone: 760-934-2478
fax: 760-934-2478
e-mail: mljj@qnet.com
web site: http://mammothjazz.org

Executive Director
Ruth Schnabel, CFE
CalFest
P.O. Box 7547
Tahoe City, CA 96145
phone: 530-583-5605
fax: 530-581-5101
e-mail: calfest@telis.org

Chesapeake Region Festivals & Events Assoc.
(MD, DC, WV & VA)
(Northern = Zipcodes 201* and 22*)
Executive Director
Bill Collins, Jr., CFE
The High Road, Inc.
P.O. Box 5256
Springfield, VA 22150-5256
phone: 703-317-7909
fax: 703-317-4827
e-mail: Hyroad@aol.com

Colorado Festivals & Events Assoc.
Michael Porto
M.A.P. Marketing Group
19626 E El Dorado Drive
Aurora, CO 80013
phone: 303-680-5609
fax: 303-680-5609
e-mail: mapmarketing@tesser.com

Chapter Administrator
Lora Raber
Colorado Festivals & Events Assoc.
7196 S Nelson Street
Littleton, CO 80127
phone: 303-904-1521
fax: 303-948-5550
e-mail: coCoug@aol.com

The Dakotas Festivals & Events Assoc.
(SD & ND)
Sue Braun
Downtown Business Association
P.O. Box 962
Fargo, ND 58107
phone: 701-241-1570
fax: 701-241-8275
e-mail: sbraunl@uswest.net

Florida Festivals & Events Assoc., Inc.
Darrell R. Stefany
EventMakers Corporation
3701 W Azeele Street
Tampa, FL 33609
phone: 813-353-8070
fax: 813-353-8075
e-mail: events1@gte.net

Executive Director
Eleanor Jean Krusell, CFE
EVENTS ETCETERA, INC.
4174 Palo Verde Drive
Boynton Beach, FL 33436
phone: 561-736-7071
fax: 561-736-7188
e-mail: ejkrusell@aol.com

Georgia Festivals & Events Assoc.
Carolyn Morris
Fourth in the Park
P.O. Box 609
Marietta, GA 30061
phone: 770-794-5607
fax: 770-794-5635
e-mail: cmorris@city.marietta.ga.us

Executive Director
Cheree Gayre, CFE
Georgia Festivals & Events Assoc.
P.O. Box 724555
Atlanta, GA 31139
phone: 770-818-0430
fax: 770-955-5003
e-mail: cheree@gfea.com
web site: http://www.gfea.com

Hawaii Festivals & Events Assoc.
Vincent Souza
USA Hosts Hawaii
1833 Kalakaua Avenue, Suite 610
Honolulu, HI 96815
phone: 808-946-0741
fax: 808-943-6908
e-mail: VinceS@usahosts.com

Illinois Special Events Network
Cyndie Hall, CFE
5411 E State Street #345
Rockford, IL 61108
email: cyndie.hall@ci.rockford.il.us

Kentucky Festivals & Events Assoc.
Ray Tosti
Kentucky Apple Festival, Inc.
P.O. Box 879
Paintsville, KY 41240-0879
phone: 606-788-1491
fax: 606-437-3127
email: rmtosti@aep.com

Executive Director
Iris LaRue
Kentucky Festivals & Events Assoc.
P.O. Box 371
Hodgenville, KY 42748
phone: 270-358-3163
fax: 270-358-8978
email: lincolnm@ne.infi.net

Louisiana Festivals & Events Assoc.
Cheryl R. McCarty
Aggressive Concepts, Inc.
1204 St. John Street
Lafayette, LA 70506
phone: 337-234-0012
fax: 337-232-2279
e-mail: wiket@msn.com

***Michigan Festivals & Events Assoc.**
Sue Bila
P.O. Box 22/144 S Saginaw Street
Chesaning, MI 48616
phone: 517-845-2080
fax: 517-845-5074
e-mail: admin@mfea.org
web site: http://www.mfea.org

Mid-Atlantic Festivals & Events Assoc. (PA, NJ & DE)
Valerie Lagauskas, CFE
Synergistic Concepts, Inc.
P. O. Box 2435
Bala Cynwyd, PA 19004
phone: 215-567-2621
fax: 215-567-4099
e-mail: Lagval@aol.com

Midwest Festivals & Events Assoc. (KS, MO, IA & NE)
C.M. Zuby, CFE
ENVISIONATIONS:
a creative visioning co-operative
3760 Garfield Street
Lincoln, NE 68506
phone: 402-489-3604
fax: 402-327-0103
e-mail: cmzuby@prodigy.net

***Minnesota Festivals & Events Assoc.**
Leo Berg
P.O. Box 461
New Ulm, MN 56073
phone: 507-359-3378
fax: 507-354-8853
e-mail: mfea@newulmtel.net

web site: http://www.mfea.net

***Nebraska Festivals & Events Assoc.**
Clark Kolterman
660 E Pinewood Avenue
Seward, NE 68434
phone: 402-643-6138
fax: 402-643-3410

New York Festivals & Events Assoc.
Belinda Venuti
Seneca Lake Whale Watch
P.O. Box 226
Geneva, NY 14456
phone: 315-781-0820
fax: 315-781-2766
e-mail: slww@fltg.net
web site: http://www.whalewatch.org

***North Carolina Assoc. of Festivals & Events, Inc.**
Kay Saintsing
P.O. Box 1642
Lexington, NC 27293
phone: 800-555-2142 Pin# 61888
fax: 336-956-1647

***Ohio Festivals & Events Assoc.**
Donna Warner
2055 Cherokee Drive NW
London, OH 43140
phone: 740-852-8890

President
Chuck Jackson
P.O. Box 47
Ashville, OH 43103
phone: 740-983-4797

Festivals & Events Assoc. of Oklahoma
Melyn Johnson
Guymon Convention & Tourism Dept.
219 NW Fourth Street
Guymon, OK 73942
phone: 580-338-5838 x227
fax: 580-338-1854
e-mail: melynj@ptsi.net
web site: http://www.guymonok.com

Oregon Festivals & Events Assoc.
Peter Mott
Portland Rose Festival Assoociation
220 NW Second Avenue
Portland, OR 97209
phone: 503-227-2681
fax: 503-227-6603
e-mail: peterm@rosefestival.org
web site: http://www.rosefestival.org/rose

Rocky Mountain Festivals & Events Assoc.
(ID, MT, UT & WY)
Amy McDevitt
First Security Bank
P.O. Box 15214
Boise, ID 83715
phone: 208-393-2255
fax: 208-393-2187
e-mail: amcdevi@fscnet.com

Executive Director
Heather Price
P.O. Box 7943
Boise, ID 83707
phone: 208-395-0627
fax: 208-343-6725
e-mail: showsetc@micron.net

***South Carolina Festival Assoc.**
Gene Krcelic
722 Blanding Street
Columbia, SC 29201-2709
phone: 803-401-8850
fax: 803-343-8747
e-mail: cac@columbiasc.net

Tennessee Festivals & Events Assoc.
Ron Thomas
Tennessee Walking Horse Celebration
P.O. Box 1010
Shelbyville, TN 37160
phone: 931-684-5915

fax: 931-684-5949
e-mail: twhnc@twhnc.com
web site: http://www.twhnc.com

Event Coordinator
Faye Brewer
Variety Services
P.O. Box 886
Chattanooga, TN 37401
phone: 423-756-2211
fax: 423-756-2719

Texas Festivals & Events Assoc.
(TX & NM)
Chairwoman
Kay Wolf, CFE
Official Shrimporee of Texas
130 W Goodnight
Aransas Pass, TX 78336
phone: 361-758-2750
fax: 361-758-8320
e-mail: info@aransaspass.org
web site: http://www.aransaspass.org

President
Paul Serff
Texas Festivals & Events Association
812 San Antonio Street, Suite 401
Austin, TX 78701
phone: 512-476-4483
fax: 512-478-9177
e-mail: pserff@tourtexas.org

Washington Festivals & Events Assoc.
Al Parisi
Fremont Fair
P.O. Box 31151
Seattle, WA 98103
phone: 206-633-4409
fax: 206-632-1723
e-mail: freefair@halcyon.com
web site: http://www.fremontfair.com

West Virginia Assoc. of Fairs & Festivals
Debra Gard
P.O. Box 1226
Lewisburg, WV 24901
phone: 888-982-3247
fax: 304-489-9402
e-mail: wvfairs&festivals@citynet.net

Wisconsin Festivals & Events Assoc.
Tom Barrett
Stevens Point Area CVB
340 Division Street N
Stevens Point, WI 54481-1153
phone: 715-344-2556
fax: 715-344-5818
e-mail: spacvb@coredcs.com
web site: http://www.easy-acess.com/spacvb

Executive Secretary
Kelly Luberda, CFE
P.O. Box 10441
Green Bay, WI 54307
phone: 920-338-8193
fax: 920-338-8193
e-mail: wfea@netnet.net

Yankee Festivals & Events Assoc.
(CT, ME, MA, NH, VT & RI)
Nancy Bove
Burlington Parks & Rec. Dept.
One LaValley Lane
Burlington, VT 05401
phone: 802-865-7552
fax: 802-862-8027
e-mail: bovenancy@hotmail.com

Association Coordinator
Jeremy Kent
Burlington Parks & Rec. Dept.
One LaValley Lane
Burlington, VT 05401
phone: 802-773-2469
e-mail: jdk33@hotmail.com

Newsletters & Publications

PARADESONLINE! – Free Internet Newsletter For The Parades Industry
To subscribe send a BLANK email message to paradesonline-subscribe@eGroups.com

FESTIVAL & EVENTS EXCHANGE – Free Internet Newsletter For Festivals and Events
To subscribe send a BLANK email message to festivalsandeventsonline-subscribe@eGroups.com

Some very important sources of information for event professionals, can not only be found online but in printed materials as well. Whether they are periodicals such as magazines or newsletters, or books used as resources or inspiration, publications are a key to an event professional's success. Unfortunately, there has never been a one-stop source for materials. Colleges are just starting to offer courses and materials on the subject and your local library will have one or two books on event production at best.

PUBLICATIONS
One of the most important values IFEA members receive is the information that is shared by professionals in the industry. IFEA takes pride in offering that information via excellent publications. These publications include *Festivals: The How-To of Festivals and Events* magazine and quarterly Chapter Newsletters. We also publish an annual membership directory along with conference daily issues of IFEA Today at the Annual Convention and Profits Seminar. Each of these publications focuses on what other members are doing to improve their event and how they have done it. These inspirational ideas are continuously adapted and implemented by events around the world. It is truly a great idea exchange.

FESTIVALS: THE HOW-TO OF FESTIVALS & EVENTS
Each issue has a focus on specifics for the events industry. Feature articles are written by guest authors on various event production subjects, ranging from fireworks to parades or insurance to equipment. Other areas in each issue include: *IFEA International* shares what is going on around the world, from IFEA Europe and Australia, to members across Canada. A *Profits* section gives you the latest in sponsorship and money-making ideas that have been successful for another member. The *World of Festivals* section provides a broader view of the world of special events.The stories here keeps you up to date on what events and organizations are doing to keep their event fresh and keep up with the needs of their festival attendees. The *State News* section specifically geared towards what each state chapter is doing. Short bits of information share what's going on around the United States.
For The Record is a section that will keep you up to date on who's doing what and moving where. Also, the *IFEA Extra* section lets members know what's happening with the association, whether it is upcoming events, board directives or taxation issues. Our *Marketplace* section features products and services that industry professionals need.

Quarterly Chapter Newsletters
As mentioned in the state chapter pages, any member of a chapter association received a newsletter geared specifically towards what is happening on a local level. Each chapter newsletter includes an event calendar and listing of new members, so you can keep up to date with members around your region.

For Float Supplies
Visit **http://www.victorycorps.com/floats.html**
Or Call 1-800-328-6120

The IFEA Library

A great learning center complete with books written by the best experts in the industry and tapes that explain how to produce special events. As the industry grows, more companies are publishing books on the events industry, however, no library or source is more complete than the IFEA Library.

In addition to outstanding books, IFEA has added audio-cassettes and videos to the collection of resources available for purchase. These recordings feature expert presentations from past IFEA conventions and seminars. They bring the best of our association directly to you. Each purchase is a small investment for what you'll learn! The IFEA Library is sponsored by K&K Insurance Group, Inc. and the International Festivals & Events Association Foundation.

IFEA Published Books include:
IFEA's Official Guide to Sponsorship; 101 Event Ideas (I Wish I'd Thought Of); IFEA's Official Guide to Parades; Event Trends; Event Ideas For Children; Money-Making Ideas For Your Event; Fundamental Focus; Event Operations; IFEA's Managing Volunteers; IFEA's Producing a Small to Midsize Festival; Media Relations: The Good, the Blah, the Ugly.

Audio Cassettes

IFEA records sessions from its Annual Convention and Profits Seminar. These tapes are a great way to benefit from the sessions you missed or share with your co-workers and colleagues. Subjects include: entertainment, marketing and media, operations, sponsorship, event trends, food and beverage, international relations, parades, research, human resources, technology and more.

Video Tapes

IFEA videotapes sessions from its annual convention, which has been quoted as being "the best special event experience in the world." These videos contain valuable information from the convention and profits seminar, but also includes visual presentations as well.

Visit our web site at http://www.ifea.com to browse the IFEA Library as well as purchase items online through our secure server. Or for a free brochure call 360-457-3141 or email jsmith@ifea.com.

Some Other Sources

:

Educational Institutions

University of Illinois at Urbana-Champaign
Department of Leisure Studies
http://www.leisurestudies.uiuc.edu/

Purdue University – Restaurant Hotel Institutional and Tourism Management Program www.cfs.purdue.edu/RHIT/

George Washington University –
Event Management Certificate Program
http://www.gwu.edu/~emp/

University of Minnesota –
Certified Festival Management Program
http://www.tourism.umn.edu/zcfm.html

University of Nevada at LasVegas – Tourism and Convention Administration Department
www.unlv.edu/Tourism/

Fundraising

The Foundation Center –
http://www.fdncenter.org/

The Chronicle of Philanthropy –
http://philanthropy.com/

Jazz and Blues Resources

Jazz World Society –
http://jazzsociety.com/index.htm

Blues Access: the blues magazine on-line –
http://www.bluesaccess.com/ba_home.html

Blues Revue – http://www.bluesrevue.com/

Management

Internet Nonprofit Center –
http://www.nonprofits.org/

The Nonprofit Times –
http://www.nptimes.com/

National Center for Nonprofit Boards –
http://www.ncnb.org/

Media

Billboard Magazine –
http://www.billboard.com/

Amusement Business –
http://www.amusementbusiness.com/

Event Solutions Magazine –
http://www.event-solutions.com/

Parade Consultants & Consulting Firms

Sylvia Allen
Allen Consulting
Ordell, NJ 55430
Tel: 1- 732-946-2711
Email: sylvia@allenconsulting.com
http://www.allenconsulting.com/

Toni Bodenhamer
Toni Bodenhamer & Co. (since 1981; parades since 1992)
3610 Bonnie Lane
Santa Rosa, CA 95404
Tel: 707-542-5803
Fax: 707-542-5836
Tbodenhamer@aol.com

Ira L. Rosen, President
Entertainment On Location, Inc.
2410-8 Sylvan Drive
Point Pleasant, NJ 08742
732-701-9323
Fax: 732-701-9327
e-mail: eolinc@aol.com
website: http://www.eolproductions.com

Barbara Gann
285 Sycamore Lane
Mayfield, Ky 42066
bgann@wk.net or
mayfieldjaycees@yahoo.com
Tel 270-251-9270

Valerie Lagauskas
Synergistic Concepts, Inc.
345 West 55th Street
New York, NY 10019
(212) 582-1112
lagval@aol.com

Ray Pulver

UpBeat Parade Productions
5320 Cedar Grove Circle
San Jose, CA 95123
Business Phone/Fax: 408-629-2520 or 408-226-9680
Email: Upbeatparades@aol.com

Shani Wood
Parade Director
NSW Centenary of Federation
Ph Direct - (02) 8274 2029
Fax - (02) 9258 0055
Mobile 0413 382 550
Email woodsr@adc.nsw.gov.au